Chalmers Publication Library

CHALMERS

Copyright Notice IEEE

©20XX IEEE. Personal use of this material is permitted. However, permission to reprint/republish this material for advertising or promotional purposes or for creating new collective works for resale or redistribution to servers or lists, or to reuse any copyrighted component of this work in other works must be obtained from the IEEE.

(Article begins on next page)

[2] A. Erentok and R. W. Ziolkowski, "Metamaterial-inspired efficient electrically small antennas," *IEEE Trans. Antennas Propag.*, vol. 56, pp. 691–707, Mar. 2008.
[3] L. J. Chu, "Physical limitations of omnidirectional antennas," *J. Appl. Phys.*, vol. 19, pp. 1163–1175, Dec. 1948.
[4] H. A. Wheeler, "Fundamental limitations of small antennas," in *IRE Proc.*, Dec. 1947, vol. 35, pp. 1479–1484.
[5] S. R. Best, "The radiation properties of electrically small folded spherical helix antennas," *IEEE Trans. Antennas Propag.*, vol. 52, pp. 953–960, Apr. 2004.
[6] S. R. Best, "The performance properties of electrically small resonant multiple-arm folded wire antennas," *IEEE Antennas Propag. Mag.*, vol. 47, pp. 13–27, Aug. 2005.
[7] S. Lim, R. L. Rogers, and H. Ling, "A tunable electrically small antenna for ground wave transmission," *IEEE Trans. Antennas Propag.*, vol. 54, pp. 417–421, Feb. 2006.
[8] R. W. Ziolkowski and A. D. Kipple, "Application of double negative materials to increase the power radiated by electrically small antennas," *IEEE Trans. Antennas Propag.*, vol. 51, pp. 2626–2640, Oct. 2003.
[9] B. Ghosh, S. Ghosh, and A. B. Kakade, "Investigation of gain enhancement of electrically small antennas using double-negative, single-negative and double-positive materials," *Phys. Rev. E.*, vol. 78, pp. 026611/1–026611/13, Aug. 2008.
[10] K. Sarabandi and R. Azadegan, "Design of an efficient miniaturized UHF planar antenna," *IEEE Trans. Antennas Propag.*, vol. 51, pp. 1270–1276, June 2003.
[11] R. Azadegan and K. Sarabandi, "A novel approach for miniaturization of slot antennas," *IEEE Trans. Antennas Propag.*, vol. 51, pp. 421–429, Mar. 2003.
[12] Ansoft Corporation. Pittsburgh, PA, HFSS ver. 10.2.
[13] D. M. Pozar and B. Kaufman, "Comparison of three methods for the measurement of printed antenna efficiency," *IEEE Trans. Antennas Propag.*, vol. 36, pp. 136–139, Jan. 1988.

Unified Definitions of Efficiencies and System Noise Temperature for Receiving Antenna Arrays

Karl F. Warnick, Marianna V. Ivashina, Rob Maaskant, and Bert Woestenburg

***Abstract*—Two methods for defining the efficiencies and system noise temperature of a receiving antenna array have recently been developed, one based on the isotropic noise response of the array and the other on an equivalent system representation. This letter demonstrates the equivalence of the two formulations and proposes a new set of standard definitions of antenna figures of merit for beamforming arrays that accounts for the effect of interactions between antenna element mutual coupling and receiver noise on system performance.**

***Index Terms*—Amplifier noise, antenna array feeds, antenna array mutual coupling, antenna measurements.**

I. Introduction

A major international effort is currently underway in the radio astronomy community to develop dense phased arrays with high sensitivity, broad bandwidth, and wide field of view. One of the lessons from the past few years of research in this area is that understanding the interaction between antenna element mutual coupling and receiver noise is critical to optimizing system performance.

To account for these important interaction effects, several methods have been developed for modeling the sensitivity of a receiver system in a direct numerical manner [1]–[4]. Such methods are powerful tools for characterizing a complex system that includes an antenna array, multi-channel receiver, and beamforming network, but are unwieldy for the purpose of design optimization of low noise phased array receivers. For array design optimization, practical figures of merit and measurement procedures are required that allow predominant factors affecting receiver sensitivity to be isolated and understood.

Two approaches were recently introduced for characterizing the performance of mutually coupled antenna arrays in terms of efficiencies and equivalent noise temperatures [5], [6]. Warnick and Jeffs [5] used network theory and the electromagnetic reciprocity principle to express the efficiencies and system noise temperature of an array receiver in terms of the antenna isotropic noise response. The isotropic noise response of the array can be determined using a generalization of the Y-factor noise measurement technique, which provides a method for experimental array characterization [7]–[9]. Another approach for defining antenna figures of merit for array receivers has been given by Ivashina, Maaskant, and Woestenburg [6], using an equivalent system representation with efficiencies and noise temperature as the model parameters of the equivalent single-port antenna and equivalent amplifier.

The purpose of this paper is to present definitions for antenna terms that reflect these recent results on coupled, low noise array receivers and can be implemented in practical measurement techniques. For single-port, passive antennas, these definitions reduce to existing IEEE standard antenna terms. We will show that the proposed definitions are consistent with the results in [5], [6], which demonstrates that the two approaches can be unified and places the definitions presented in this paper on a solid theoretical foundation.

II. Definitions

The definitions given below apply to any one output of a receiving antenna system, whether a single antenna, passive array, active array with beamforming network, or an array with beams formed in digital signal processing. The system may include nonreciprocal components such as amplifiers. For array antennas, these quantities and figures of merit are beam-dependent, and their values are contingent on a given set of beamformer coefficients.

Isotropic noise response. Antenna output noise power with a noiseless receiver when in an environment with brightness temperature distribution that is independent of direction and in thermal equilibrium with the antenna.

Available receiver gain. The ratio of the isotropic noise response of the antenna to the available power at the terminals of any passive antenna over the same noise equivalent bandwidth and in the same isotropic noise environment.

Beam equivalent available power. Antenna output power divided by the available receiver gain.

Beam equivalent noise temperature. Temperature of an isotropic thermal noise environment such that the isotropic noise response is equal to the noise power at the antenna output per unit bandwidth at a specified frequency.

Effective area. In a given direction, the ratio of the beam equivalent available power due to a plane wave incident on the antenna from that direction to the power flux density of the plane wave, the wave being polarization matched to the antenna.

Manuscript received June 23, 2009; revised December 18, 2009; accepted December 22, 2009. Date of publication March 29, 2010; date of current version June 03, 2010.

K. F. Warnick is with the Department of Electrical and Computer Engineering, Brigham Young University, Provo, UT 84602 USA.

M. V. Ivashina, R. Maaskant, and B. Woestenburg are with the Netherlands Institute for Radio Astronomy (ASTRON), P.O. Box 2, 7990 AA Dwingeloo, The Netherlands.

Digital Object Identifier 10.1109/TAP.2010.2046859

0018-926X/$26.00 © 2010 IEEE

Radiation efficiency. The ratio of the isotropic noise response with noiseless antenna and receiver electronics to the isotropic noise response.

Noise matching efficiency. The ratio of the receiver noise power, with all receiver channels and array element ports ideally noise matched, to the actual receiver noise power at the antenna output.

These definitions are based on the theoretical framework developed in [5], [6], [10]. The concept of isotropic noise response was used to derive array antenna figures of merit in [5], [10], and is related to solid-beam efficiency [11]. Available receiver gain for a beamforming array was defined in [6]. Noise matching efficiency was introduced in [5] and is related to coupling efficiency [6], [12].

It can be shown that these definitions are equivalent for a reciprocal antenna to the IEEE standard for antenna terms [5]. The proof proceeds from the fundamental result that the isotropic noise response of a receiving antenna is closely related by the reciprocity principle to the total radiated power of the same antenna when excited as a transmitter.

III. Application to a Beamforming Array

To illustrate these definitions, we will apply them to a canonical beamforming array shown in Fig. 1(a) consisting of M antenna elements with each port connected to a low noise amplifier (LNA) and receiver. The receiver output voltages are arranged into a vector $\mathbf{v}$, which includes contributions from a signal of interest, external noise and interference sources, noise due to ohmic losses in the array, and receiver noise according to

$$\mathbf{v} = \mathbf{v}_{\rm sig} + \mathbf{v}_{\rm ext} + \mathbf{v}_{\rm loss} + \mathbf{v}_{\rm rec}. \tag{1}$$

The receiver output voltage correlation matrix is

$$\mathbf{R}_{\mathbf{v}} = \mathrm{E}[\mathbf{v}\mathbf{v}^H] = \mathbf{R}_{\rm sig} + \mathbf{R}_{\rm ext} + \mathbf{R}_{\rm loss} + \mathbf{R}_{\rm rec} \tag{2}$$

where we have assumed that the signal and noise contributions are uncorrelated.

The receiver output voltage phasors are combined using a vector of complex coefficients $\mathbf{w}$ to produce the beam output voltage signal $v_{\rm out} = \mathbf{w}^H\mathbf{v}$. For simplicity, we assume that all elements are beamformed, although the treatment readily accomodates arrays with parasitic elements [6] or beams formed from subarrays. From the definition of the voltage correlation matrix, the time average beam output power relative to a 1 Ω load is $P_{\rm out} = (1/2)\mathbf{w}^H\mathbf{R}_{\mathbf{v}}\mathbf{w}$. It is customary in the array signal processing literature to drop the factor of 1/2.

Isotropic noise response. If the array is in an isotropic thermal noise environment with brightness temperature $T_{\rm iso}$, then we label the external noise correlation matrix as $\mathbf{R}_{\rm ext,iso}$. The beam isotropic noise response is

$$P_{\rm t,iso} = \mathbf{w}^H\mathbf{R}_{\rm t,iso}\mathbf{w} \tag{3}$$

where $\mathbf{R}_{\rm t,iso} = \mathbf{R}_{\rm ext,iso} + \mathbf{R}_{\rm loss}$ and $\mathbf{R}_{\rm loss}$ is obtained under the condition that the array is at temperature $T_{\rm iso}$. Explicit formulas for the isotropic noise response are given in Section III-B and a measurement procedure is described in Section III-C.

Available receiver gain. The available receiver gain is

$$G_{\rm rec}^{\rm av} = \frac{P_{\rm t,iso}}{k_{\rm b}T_{\rm iso}B} \tag{4}$$

where B is the system noise equivalent bandwidth and $k_{\rm b}$ is Boltzmann's constant.

Beam equivalent available power. The beam equivalent available power due to the signal of interest is

$$P_{\rm sig}^{\rm av} = \frac{P_{\rm sig}}{G_{\rm rec}^{\rm av}} \tag{5}$$

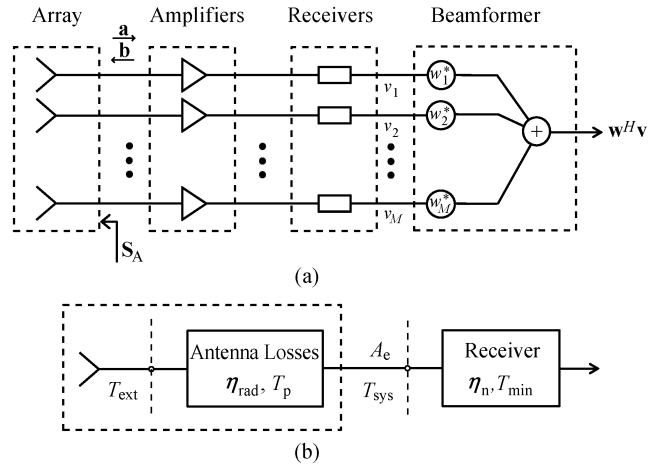

Fig. 1. (a) Beamforming array receiver system diagram. (b) Equivalent system with reference planes indicated.

where $P_{\rm sig} = \mathbf{w}^H\mathbf{R}_{\rm sig}\mathbf{w}$. The relationship between beam equivalent available power and the available power at the terminals of the array elements is considered in Section III-D.

Beam equivalent noise temperature. The beam equivalent system noise temperature is

$$T_{\rm sys} = T_{\rm iso}\frac{P_{\rm noise}}{P_{\rm t,iso}} = \frac{T_{\rm noise}}{G_{\rm rec}^{\rm av}} \tag{6}$$

where $P_{\rm noise} = k_{\rm b}BT_{\rm noise} = \mathbf{w}^H\mathbf{R}_{\rm n}\mathbf{w}$ and $\mathbf{R}_{\rm n} = \mathbf{R}_{\rm ext} + \mathbf{R}_{\rm loss} + \mathbf{R}_{\rm rec}$. This definition can also be applied to individual components of the system noise due to external thermal sources, antenna losses, or receiver electronics. The beam equivalent receiver noise temperature, for example, is

$$T_{\rm rec} = T_{\rm iso}\frac{P_{\rm rec}}{P_{\rm t,iso}} \tag{7}$$

where $P_{\rm rec} = \mathbf{w}^H\mathbf{R}_{\rm rec}\mathbf{w}$. The reference plane for beam equivalent system noise temperature is indicated in Fig. 1(b). By convention, equivalent system noise powers and temperatures are referenced to the antenna ports after antenna losses, whereas external noise sources are referenced to an antenna temperature before losses ("to the sky"), so that the beam equivalent external noise temperature is

$$T_{\rm ext} = T_{\rm iso}\frac{P_{\rm ext}}{P_{\rm ext,iso}} \tag{8}$$

where $P_{\rm ext} = \mathbf{w}^H\mathbf{R}_{\rm ext}\mathbf{w}$ and $P_{\rm ext,iso} = \mathbf{w}^H\mathbf{R}_{\rm ext,iso}\mathbf{w}$. With these definitions for beam equivalent noise temperatures, it can be shown that the single-port antenna temperature formula $T_{\rm sys} = \eta_{\rm rad}T_{\rm ext} + (1 - \eta_{\rm rad})T_{\rm p} + T_{\rm rec}$, where $T_{\rm p}$ is the physical temperature of the antenna, generalizes to an active beamforming array.

Effective area. The beam effective area is

$$A_{\rm e} = \frac{P_{\rm sig}^{\rm av}}{S_{\rm sig}} \tag{9}$$

where the signal of interest is a plane wave with power flux density $S_{\rm sig}$ and polarization matched to the beam such that $A_{\rm e}$ is at a maximum. For an arbitrarily polarized incident field, partial gain and polarization efficiency can be defined according to the usual conventions.

Radiation efficiency. The beam radiation efficiency is

$$\eta_{\rm rad} = \frac{P_{\rm ext,iso}}{P_{\rm t,iso}} = \frac{P_{\rm ext,iso}}{P_{\rm ext,iso} + P_{\rm loss}} \tag{10}$$

where the beam output noise power due to antenna losses, $P_{\rm loss} = \mathbf{w}^H \mathbf{R}_{\rm loss} \mathbf{w}$, is measured under the condition that the antenna and isotropic environment are in thermal equilibrium, so that the physical temperature $T_{\rm p}$ of the antenna is $T_{\rm iso}$.

Noise matching efficiency. If the minimum equivalent noise temperature of each LNA and receiver chain is $T_{\rm min}$, then the beam noise matching efficiency is

$$\eta_{\rm n} = \frac{T_{\rm min}}{T_{\rm rec}} = \frac{T_{\rm min}}{T_{\rm iso}} \frac{P_{\rm t,iso}}{P_{\rm rec}}. \tag{11}$$

The receivers and array element ports are ideally matched if the optimal source reflection coefficient parameter for each LNA is equal to the active reflection coefficient at the corresponding array element port [12], [13]. In this case, $T_{\rm rec} = T_{\rm min}$ and the noise matching efficiency is unity.

A. Aperture Efficiency, Antenna Efficiency, and Sensitivity

Using these fundamental figures of merit, derived antenna parameters such as aperture efficiency, antenna efficiency, and receiver sensitivity can be expressed. These parameters satisfy expected relationships from classical antenna theory, which indicates the consistency of the definitions given in Section II.

Aperture efficiency. For large aperture-type antennas, the standard directivity is

$$D_{\rm std} = \frac{4\pi}{\lambda^2} A_{\rm p} \tag{12}$$

where for oblique incidence the aperture area $A_{\rm p}$ is taken to be the projected area in a plane transverse to the signal arrival direction. Using

$$A_{\rm e} = \frac{\lambda^2}{4\pi} \eta_{\rm rad} D_{\rm sig} \tag{13}$$

where $D_{\rm sig}$ is the directivity in the direction of the signal of interest, the aperture efficiency is

$$\eta_{\rm ap} = \frac{D_{\rm sig}}{D_{\rm std}} = \frac{k_b T_{\rm iso} B}{A_{\rm p} S_{\rm sig}} \frac{P_{\rm sig}}{P_{\rm ext,iso}} \tag{14}$$

where we have used (9) and (10) for the effective area and radiation efficiency and (4) and (5) for the available receiver gain and beam equivalent available signal power, respectively.

Antenna efficiency. The antenna efficiency is

$$\eta_{\rm ant} = \frac{A_{\rm e}}{A_{\rm p}} = \frac{k_b T_{\rm iso} B}{A_{\rm p} S_{\rm sig}} \frac{P_{\rm sig}}{P_{\rm t,iso}}. \tag{15}$$

In view of (10) and (14), it can be seen that $\eta_{\rm ant} = \eta_{\rm rad} \eta_{\rm ap}$, as expected.

While this definition of antenna efficiency conforms to the IEEE standard for antenna terms, other notions of efficiency are found in the literature [14]–[16]. Coupling or mismatch efficiency is sometimes included as an additional factor to yield a total efficiency (which implies that the reference plane is located to the right of the antenna/receiver junction in Fig. 1). While this concept is useful for transmitting arrays, for active receiving antennas, impedance mismatches are inextricably linked with receiver noise and it is therefore more natural to incorporate mismatch losses as an increase in equivalent receiver noise rather than as a decrease in antenna efficiency.

Receiver sensitivity. In terms of the effective area and efficiencies, the receiver sensitivity or figure of merit can be expressed as [5]

$$\frac{A_{\rm e}}{T_{\rm sys}} = \frac{\eta_{\rm rad} \eta_{\rm ap} A_{\rm p}}{\eta_{\rm rad} T_{\rm ext} + (1 - \eta_{\rm rad}) T_{\rm p} + T_{\rm min}/\eta_{\rm n}} ({\rm m}^2/{\rm K}) \tag{16}$$

where $T_{\rm ext}$ is the equivalent antenna noise temperature due to spillover, atmosphere, and other external sources and $T_{\rm p}$ is the physical temperature of the antenna. The sensitivity, efficiencies, and equivalent temperatures are in general dependent on the beamformer coefficients (i.e., on the beam scan angle).

B. Isotropic Noise Response

The definitions given in Section II rely on knowledge of the isotropic noise response of the array. Using network theory, the isotropic noise response can be related to the antenna array S-parameter matrix. Let $\mathbf{a}_{\rm t}$ be a vector of the forward wave amplitudes of the noise emanating from the array element ports into matched loads with the array in thermal equilibrium with an isotropic thermal environment at temperature $T_{\rm iso}$. The correlation matrix of the noise wave amplitudes is defined to be

$$\mathbf{R}_{\rm t,iso,f} = {\rm E}\left[\mathbf{a}_{\rm t} \mathbf{a}_{\rm t}^H\right] \tag{17}$$

where ${\rm E}[\cdot]$ denotes expectation. From Bosma's theorem, the forward thermal noise wave correlation matrix is [17]

$$\mathbf{R}_{\rm t,iso,f} = 2 k_b T_{\rm iso} B \left(\mathbf{I} - \mathbf{S}_{\rm A} \mathbf{S}_{\rm A}^H\right) \tag{18}$$

where $\mathbf{S}_{\rm A}$ is the antenna array S-parameter matrix. The forward wave amplitudes $\mathbf{a}_{\rm t}$ are related to the receiver output voltages $\mathbf{v}_{\rm t}$ by a linear transformation of the form

$$\mathbf{v}_{\rm t} = \mathbf{G} \mathbf{a}_{\rm t} \tag{19}$$

from which it follows that the isotropic noise voltage correlation matrix is

$$\mathbf{R}_{\rm t,iso} = {\rm E}\left[\mathbf{v}_{\rm t} \mathbf{v}_{\rm t}^H\right] = \mathbf{G} \mathbf{R}_{\rm t,iso,f} \mathbf{G}^H. \tag{20}$$

The isotropic noise response is related in a similar way to the array mutual impedance matrix. From Twiss's theorem [18].

$$\mathbf{R}_{\rm t,iso} = 8 k_b T_{\rm iso} B \mathbf{Q} {\rm Re}[\mathbf{Z}_{\rm A}] \mathbf{Q}^H \tag{21}$$

where $\mathbf{Q}$ is a transformation from open circuit voltages at the array element ports to the receiver output voltages $\mathbf{v}$ [5, Eq. (3)].

The portion of the isotropic noise correlation matrix that is caused by external noise sources is [5]

$$\mathbf{R}_{\rm ext,iso} = \mathbf{R}_{\rm t,iso} - \mathbf{R}_{\rm loss} = \frac{1}{|I_0|^2} 16 k_b T_{\rm iso} B \mathbf{Q} \mathbf{A} \mathbf{Q}^H \tag{22}$$

where $\mathbf{A}$ is a matrix of the pattern overlap integrals given by

$$A_{mn} = \frac{1}{2\eta_0} \int \overline{E}_m(\mathbf{r}) \cdot \overline{E}_n^*(\mathbf{r}) r^2 d\Omega \tag{23}$$

and $\overline{E}_n$ is the radiation pattern of the nth array element with input current I_0 and all other element ports open circuited.

C. Measuring the Isotropic Noise Response

The element pattern measurements required to implement (22) can be time consuming and impractical. By measuring the array outputs for isotropic thermal environments with two different temperatures, the Y-factor technique can be used to determine $\mathbf{R}_{\rm ext,iso}$ directly. The array output voltage correlation matrix for a noise environment with brightness temperature $T_{\rm hot}$ is

$$\mathbf{R}_{\rm hot} = \frac{T_{\rm hot}}{T_{\rm iso}} \mathbf{R}_{\rm ext,iso} + \mathbf{R}_{\rm loss} + \mathbf{R}_{\rm rec}. \tag{24}$$

With a second measurement at temperature $T_{\rm cold}$, assuming that the physical antenna temperature does not change between the hot and cold measurements, straightforward manipulations lead to

$$\mathbf{R}_{\rm ext,iso} = \frac{T_{\rm iso}}{T_{\rm hot} - T_{\rm cold}}(\mathbf{R}_{\rm hot} - \mathbf{R}_{\rm cold}). \tag{25}$$

This approach has been implemented successfully using microwave absorber as the hot source and sky as the cold source with a conducting screen to shield the antenna from thermal noise radiated by the ground [7]–[9], [19]. A similar setup was used in earlier work to measure the radiation efficiency of single-port antennas [20], [21].

D. Available Power

The relationship given above between the isotropic noise correlation matrix and the array mutual resistance matrix can be used to show that the maximum beam equivalent available power is equal to the available power at the array element terminals. For a single point source, $\mathbf{R}_{\rm sig} = \mathbf{Q}\mathbf{v}_{\rm sig,oc}\mathbf{v}_{\rm sig,oc}^H\mathbf{Q}^H$, where $\mathbf{v}_{\rm sig,oc}$ is a vector of the open circuit voltages induced by the signal of interest at the array element terminals. With (21), the beam equivalent available power due to the signal of interest is

$$P_{\rm sig}^{\rm av} = \frac{\mathbf{w}_{\rm oc}^H\mathbf{v}_{\rm sig,oc}\mathbf{v}_{\rm sig,oc}^H\mathbf{w}_{\rm oc}}{8\mathbf{w}_{\rm oc}^H{\rm Re}[\mathbf{Z}_{\rm A}]\mathbf{w}_{\rm oc}} \tag{26}$$

where $\mathbf{w}_{\rm oc} = \mathbf{Q}^H\mathbf{w}$. The beamformer weight vector that maximizes this quadratic form is $\mathbf{w}_{\rm oc} = {\rm Re}[\mathbf{Z}_{\rm A}]^{-1}\mathbf{v}_{\rm sig,oc}$, and the resulting maximum beam equivalent available signal power is

$$P_{\rm sig}^{\rm av,max} = \frac{1}{8}\mathbf{v}_{\rm sig,oc}^H{\rm Re}[\mathbf{Z}_{\rm A}]^{-1}\mathbf{v}_{\rm sig,oc}. \tag{27}$$

For a reciprocal array ($\mathbf{Z}_{\rm A} = \mathbf{Z}_{\rm A}^T$), this is the signal power that would be delivered by the array to a conjugate matched, M-port load network with mutual impedance matrix $\mathbf{Z}_{\rm L} = \mathbf{Z}_{\rm A}^H$ attached to the array element terminals.

IV. Equivalence of Receiver Noise Temperature Formulations

The figures of merit defined above appear at first glance quite different from the treatment of [6], but we will now demonstrate the rigorous equivalence of the two formulations. The critical term is the beam equivalent receiver noise temperature

$$T_{\rm rec} = \frac{T_{\rm min}}{\eta_{\rm n}} = T_{\rm iso}\frac{\mathbf{w}^H\mathbf{R}_{\rm rec}\mathbf{w}}{\mathbf{w}^H\mathbf{R}_{\rm t,iso}\mathbf{w}}. \tag{28}$$

This is the temperature of an isotropic thermal noise distribution, with the array in thermal equilibrium with the environment, required to produce an output thermal noise power equal to the receiver noise power at the output. The goal is to show that this expression is equivalent to the corresponding formula in [6] for a general beamforming array receiver.

A. Receiver Noise Waves

Using network theory (28) can be reformulated in terms of forward wave amplitudes into the amplifier input ports. Using (19) in (28) leads to

$$T_{\rm rec} = T_{\rm iso}\frac{\mathbf{w}^H\mathbf{G}\mathbf{R}_{\rm rec,f}\mathbf{G}^H\mathbf{w}}{\mathbf{w}^H\mathbf{G}\mathbf{R}_{\rm t,iso,f}\mathbf{G}^H\mathbf{w}}. \tag{29}$$

If we define the beamformer weight vector referred to forward wave amplitudes at the amplifier inputs as

$$\mathbf{w}_{\rm f} = \mathbf{G}^H\mathbf{w} \tag{30}$$

then the beam receiver noise temperature becomes

$$T_{\rm rec} = T_{\rm iso}\frac{\mathbf{w}_{\rm f}^H\mathbf{R}_{\rm rec,f}\mathbf{w}_{\rm f}}{\mathbf{w}_{\rm f}^H\mathbf{R}_{\rm t,iso,f}\mathbf{w}_{\rm f}} \tag{31}$$

in terms of the correlation matrix of forward wave amplitudes at the amplifier input ports.

At this point, we will neglect noise contributed by components in the receiver chains other than the LNAs (i.e., we will assume that $T_{\rm rec} = T_{\rm LNA}$). Amplifier noise can be modeled in terms of vectors of forward and reverse amplifier noise wave amplitudes $-\mathbf{a}_\eta$ and $\mathbf{b}_\eta$, respectively, where the negative sign on the forward wave amplitudes is by convention. The total forward amplifier noise amplitude vector is (see [22, p. 51])

$$\mathbf{a}_{\rm LNA} = \mathbf{S}_{\rm A}\mathbf{b}_\eta - \mathbf{a}_\eta. \tag{32}$$

The amplifier forward noise wave correlation matrix is

$$\begin{aligned}\mathbf{R}_{\rm LNA,f} &= {\rm E}\left[\mathbf{a}_{\rm LNA}\mathbf{a}_{\rm LNA}^H\right]\\ &= {\rm E}\left[\mathbf{S}_{\rm A}\mathbf{b}_\eta\mathbf{b}_\eta^H\mathbf{S}_{\rm A}^H - \mathbf{S}_{\rm A}\mathbf{b}_\eta\mathbf{a}_\eta^H - \mathbf{a}_\eta\mathbf{b}_\eta^H\mathbf{S}_{\rm A}^H + \mathbf{a}_\eta\mathbf{a}_\eta^H\right]\\ &= 2k_bB\left(\mathbf{T}_\alpha + \mathbf{S}_{\rm A}\mathbf{T}_\beta\mathbf{S}_{\rm A}^H - \mathbf{S}_{\rm A}\mathbf{T}_\gamma - \mathbf{T}_\gamma^H\mathbf{S}_{\rm A}^H\right)\end{aligned} \tag{33}$$

where

$$\mathbf{T}_\alpha = \frac{1}{2k_bB}{\rm E}\left[\mathbf{a}_\eta\mathbf{a}_\eta^H\right] \tag{34a}$$

$$\mathbf{T}_\beta = \frac{1}{2k_bB}{\rm E}\left[\mathbf{b}_\eta\mathbf{b}_\eta^H\right] \tag{34b}$$

$$\mathbf{T}_\gamma = \frac{1}{2k_bB}{\rm E}\left[\mathbf{b}_\eta\mathbf{a}_\eta^H\right]. \tag{34c}$$

If the intrinsic noise produced by one amplifier is uncorrelated with the noise produced by the others, then $\mathbf{T}_\alpha$, $\mathbf{T}_\beta$, and $\mathbf{T}_\gamma$ are diagonal matrices.

B. Equivalent System Representation

Because we assumed that the contribution of receiver stages after the front end LNAs was negligible, $\mathbf{R}_{\rm rec,f} = \mathbf{R}_{\rm LNA,f}$. Using (18) and (33) in (31) leads to

$$T_{\rm LNA} = \frac{\mathbf{w}_{\rm f}^H\left(\mathbf{T}_\alpha + \mathbf{S}_{\rm A}\mathbf{T}_\beta\mathbf{S}_{\rm A}^H - \mathbf{S}_{\rm A}\mathbf{T}_\gamma - \mathbf{T}_\gamma^H\mathbf{S}_{\rm A}^H\right)\mathbf{w}_{\rm f}}{\mathbf{w}_{\rm f}^H\left(\mathbf{I} - \mathbf{S}_{\rm A}\mathbf{S}_{\rm A}^H\right)\mathbf{w}_{\rm f}} \tag{35}$$

for the equivalent amplifier noise temperature. Equation (35) can be expressed as

$$T_{\rm LNA} = \frac{\sum_{m=1}^M |w_{f,m}|^2T_{\eta,m}}{\mathbf{w}_{\rm f}^H\left(\mathbf{I} - \mathbf{S}_{\rm A}\mathbf{S}_{\rm A}^H\right)\mathbf{w}_{\rm f}} \tag{36}$$

where

$$T_{\eta,m} = T_{\alpha,m} + |\Gamma_{{\rm act},m}|^2T_{\beta,m} - 2{\rm Re}[\Gamma_{{\rm act},m}T_{\gamma,m}]$$

and the active reflection coefficients are defined by

$$\Gamma_{{\rm act},m} = \frac{1}{w_{{\rm f},m}^*}\sum_{n=1}^M w_{{\rm f},n}^*S_{A,nm} \tag{37}$$

$T_{\eta,m}$ can be recognized as the numerator of the extended effective input noise temperature in [22, Eq. (4.50)].

Using a standard derivation from two-port noise theory (see, e.g., [13, Appendix]), it can be shown that

$$T_{\eta,m} = \left(1 - |\Gamma_{{\rm act},m}|^2\right)T_m^{\rm LNA} \tag{38}$$

where

$$T_m^{\mathrm{LNA}} = T_{\min,m} + \frac{4R_{\mathrm{n},m}T_0|\Gamma_{\mathrm{act},m} - \Gamma_{\mathrm{opt},m}|^2}{Z_0|1+\Gamma_{\mathrm{opt},m}|^2|\left(1-|\Gamma_{\mathrm{act},m}|^2\right)} \tag{39}$$

is the equivalent noise temperature of the mth LNA in terms of the noise parameters $R_{n,m}$, $\Gamma_{\mathrm{opt},m}$, and $T_{\min,m}$. Inserting (38) in (36) leads to

$$T_{\mathrm{LNA}} = \frac{\sum_{m=1}^{M}|w_{\mathrm{f},m}|^2\left(1-|\Gamma_{\mathrm{act},m}|^2\right)T_m^{\mathrm{LNA}}}{\mathbf{w}_{\mathrm{f}}^H\left(\mathbf{I}-\mathbf{S}_{\mathrm{A}}\mathbf{S}_{\mathrm{A}}^H\right)\mathbf{w}_{\mathrm{f}}}. \tag{40}$$

Equation (40) can be placed in the form

$$T_{\mathrm{LNA}} = \frac{\mathbf{w}_{\mathrm{f}}^H\mathbf{w}_{\mathrm{f}}}{\mathbf{w}_{\mathrm{f}}^H\left(\mathbf{I}-\mathbf{S}_{\mathrm{A}}\mathbf{S}_{\mathrm{A}}^H\right)\mathbf{w}_{\mathrm{f}}} \times \frac{\sum_{m=1}^{M}\frac{1}{M}\left|S_{21}^{\mathrm{LNA}}\right|^2|w_{\mathrm{f},m}|^2\left(1-|\Gamma_{\mathrm{act},m}|^2\right)T_m^{\mathrm{LNA}}}{\frac{1}{M}\left|S_{21}^{\mathrm{LNA}}\right|^2\mathbf{w}_{\mathrm{f}}^H\mathbf{w}_{\mathrm{f}}}. \tag{41}$$

Using the definitions of the radiation efficiency, mismatch efficiency η_{mis}, uncorrelated noise power gain $G_{\mathrm{Eq}}^{\mathrm{Power}}$, and available channel gain G_m^{av} given in [6], this becomes

$$T_{\mathrm{LNA}} = \frac{\sum_{m=1}^{M}G_m^{\mathrm{av}}T_m^{\mathrm{LNA}}}{\eta_{\mathrm{mis}}G_{\mathrm{Eq}}^{\mathrm{Power}}}. \tag{42}$$

With $\eta_{\mathrm{mis}}G_{\mathrm{Eq}}^{\mathrm{Power}} = G_{\mathrm{rec}}^{\mathrm{av}}$ and the definition of $T_{\mathrm{out}}^{\mathrm{LNA}}$ in [6] we have

$$T_{\mathrm{LNA}} = \frac{T_{\mathrm{out}}^{\mathrm{LNA}}}{G_{\mathrm{rec}}^{\mathrm{av}}} \tag{43}$$

which completes the proof that (28) is equivalent to equation (17) of [6]. It follows that the equivalent system representation of [6] is consistent with the definitions given in Section II.

V. Conclusion

We have developed a framework for defining antenna figures of merit for active receiving arrays that unifies several years worth of recent work on mutually coupled, high sensitivity array receivers. This framework extends existing definitions for antenna terms to active arrays and provides standard figures of merit for characterizing array antenna performance, which will benefit ongoing research efforts in low noise receiving aperture arrays and array feeds.

References

[1] J. P. Weem and Z. Popović, "A method for determining noise coupling in a phased array antenna," in *IEEE MTT-S Int. Microwave Symp. Digest*, May 2001, vol. 1, pp. 271–274.

[2] C. Craeye, B. Parvais, and X. Dardenne, "MoM simulation of signal-to-noise patterns in infinite and finite receiving antenna arrays," *IEEE Trans. Antennas Propag.*, vol. 52, pp. 3245–3256, Dec. 2004.

[3] K. F. Warnick and M. A. Jensen, "Effect of mutual coupling on interference mitigation with a focal plane array," *IEEE Trans. Antennas Propag.*, vol. 53, pp. 2490–2498, Aug. 2005.

[4] R. Maaskant, E. E. M. Woestenburg, and M. J. Arts, "A generalized method of modeling the sensitivity of array antennas at system level," presented at the Eur. Microwave Week, Amsterdam, Oct. 2004.

[5] K. F. Warnick and B. D. Jeffs, "Efficiencies and system temperature for a beamforming array," *IEEE Antennas Wireless Propag. Lett.*, vol. 7, pp. 565–568, 2008.

[6] M. V. Ivashina, R. Maaskant, and B. Woestenburg, "Equivalent system representation to model the beam sensitivity of receiving antenna arrays," *IEEE Antennas Wireless Propag. Lett.*, vol. 7, pp. 733–737, 2008.

[7] E. E. M. Woestenburg and K. F. Dijkstra, "Noise characterization of a phased array tile," in *Proc. 33rd European Microwave Conf.*, 2003, pp. 363–366.

[8] E. E. M. Woestenburg and J. C. Kuenen, "Low noise performance perspectives of wideband aperture phased arrays," in *The Square Kilometre Array: An Engineering Perspective*. Berlin: Springer, 2005, pp. 89–99.

[9] K. F. Warnick, B. D. Jeffs, J. Landon, J. Waldron, R. Fisher, and R. Norrod, "BYU/NRAO 19-element phased array feed modeling and experimental results," presented at the URSI General Assembly, Chicago, IL, Aug. 8–15, 2008.

[10] K. F. Warnick and B. D. Jeffs, "Gain and aperture efficiency for a reflector antenna with an array feed," *IEEE Antennas Wireless Propag. Lett.*, vol. 5, no. 1, pp. 499–502, 2006.

[11] *IEEE Standard Definitions of Terms for Antennas*, IEEE Std 145-1993.

[12] K. F. Warnick, B. Woestenburg, L. Belostotski, and P. Russer, "Minimizing the noise penalty due to mutual coupling for a receiving array," *IEEE Trans. Antennas Propag.*, vol. 57, pp. 1634–1644, Jun. 2009.

[13] E. E. M. Woestenburg, "Noise matching in dense phased arrays" ASTRON, Dwingeloo, The Netherlands, Tech. Rep. RP-083, Aug. 2005.

[14] H. Minnett and B. M. Thomas, "Fields in the image space of symmetrical focusing reflectors," *IEE Proc.*, vol. 115, pp. 1419–1430, 1968.

[15] J. Robieux, "Lois generales de la liaison entre radiateurers d'onders. application uax ondes de surface et a la propagation," *Ann. Radioelectron.*, vol. 14, pp. 187–229, 1959.

[16] M. V. Ivashina, M. N. M. Kehn, P. Kildal, and R. Maaskant, "Decoupling efficiency of a wideband vivaldi focal plane array feeding a reflector antenna," *IEEE Trans. Antennas Propag.*, vol. 57, pp. 373–382, 2009.

[17] H. Bosma, "On the theory of linear noisy systems," *Philips Res. Rep., Supplement*, no. 10, pp. 1–189, 1967.

[18] R. Q. Twiss, "Nyquist's and Thevenin's theorems generalized for nonreciprocal linear networks," *J. Appl. Phys.*, vol. 26, pp. 599–602, May 1955.

[19] K. F. Warnick, B. D. Jeffs, J. Landon, J. Waldron, D. Jones, J. R. Fisher, and R. Norrod, "Phased array antenna design and characterization for next-generation radio telescopes," presented at the IEEE Int. Workshop on Antenna Technology, 2009.

[20] J. Ashkenazy, E. Levine, and D. Treves, "Radiometric measurement of antenna efficiency," *Electron. Lett.*, vol. 21, pp. 111–112, Jan. 1985.

[21] D. M. Pozar and B. Kaufman, "Comparison of three methods for the measurement of printed antenna efficiency," *IEEE Trans. Antennas Propag.*, vol. 36, pp. 136–139, Jan. 1988.

[22] J. Engberg and T. Larsen, *Noise Theory of Linear and Nonlinear Circuits*. New York: Wiley, 1995.