THESIS FOR THE DEGREE OF DOCTOR OF PHILOSOPHY

in

Machine and Vehicle Systems

Driver-centred Motion Control of Heavy Trucks

by

KRISTOFFER TAGESSON

Department of Applied Mechanics
CHALMERS UNIVERSITY OF TECHNOLOGY
Göteborg, Sweden, 2017

Driver-centred Motion Control of Heavy Trucks
Kristoffer Tagesson
ISBN 978-91-7597-535-1

Doktorsavhandlingar vid Chalmers tekniska högskola
Ny serie nr 4216
ISSN 0346-718X

Department of Applied Mechanics
Chalmers University of Technology
SE-412 96 Göteborg
Sweden
Telephone +46 (0)31 772 1000

Chalmers Reproservice
Göteborg, Sweden 2017

To Josefin and Gustaf

Driver-centred Motion Control of Heavy Trucks

Kristoffer Tagesson
Department of Applied Mechanics
Chalmers University of Technology

Abstract

Traffic accidents constitute one of the leading global causes of death. Deadly traffic accidents occur, even in countries that have implemented far-reaching countermeasures, at a rate that cannot be tolerated. Improved safety of heavy trucks is an important remedy, as these vehicles are involved in a large part of all fatal accidents. Human error forms the leading cause of these accidents. Yet, the human ability to handle unstructured elements is unparalleled. The focus of this thesis is to develop a method for controlling the longitudinal and directional motion of the truck combination. The method combines the strength in human flexibility and a computer's ability to act fast in structured situations. Furthermore, the method is derived from observations of how drivers behave in normal and critical situations. This approach is defined as driver-centred motion control.

The underlying theory of how drivers behave is based on prior art and two additional studies. In a first study the role of the dimensions of the vehicle is analysed. Furthermore, theories about how steering wheel torque should scale as vehicle properties change are established in more detail. The role of steering wheel size is one such aspect. In a second study the behaviour of the driver is analysed when the vehicle is decelerating and at the same time is exposed to a yaw disturbance. This naturally occurs when braking on split friction, after a front tyre blow out, or when differential braking is applied. The most important common conclusions drawn from these studies are the following. Steering wheel torque can be used as a means of changing driver behaviour. Yet, this requires that the action of the torque coincides with the cognitive objectives of the driver. A consequence of this is that the applied torque must change slowly in order to have a potential effect on the motion. Differential braking proves to be a much more effective approach when fast directional changes are required. This calls for a combination of differential braking and slowly varying steering wheel torque guidance, which is how the developed method operates.

The control method has been implemented and evaluated in three studies. The first study was carried out in a moving base driving simulator, involving 39 professional truck drivers, where an oncoming collision between a car and a truck combination was staged. Half of the subjects driving the truck were not given any support. This resulted in a 100% crash rate. The other half were supported by the developed controller in order to initiate a steering avoidance manoeuvre. This reduced the crash rate by 78%. In a second study directional stability control was tested on a frozen lake where the developed controller was compared to a standard stability control system. Several manoeuvres were completed. The deviation from the intended course was reduced in all cases. A more balanced combination of braking and steering forces has been identified as one of the underlying factors. In a third study, the ability of the method to handle varying levels of driver attention during split friction braking was demonstrated in a series of simulations.

Keywords: active safety, active steering, driver behaviour, heavy trucks, torque feedback, steering by braking, electronic stability control, oncoming collision, motion coordination

Acknowledgements

The research presented in this thesis has been financially supported by my employer Volvo Group Trucks Technology, Sentient Sweden and Sweden's innovation agency VINNOVA. This support is gratefully acknowledged.

I have been very fortunate in having three enthusiastic supervisors, Prof. Bengt Jacobson, Adj. Prof. Leo Laine, and Dr. Jochen Pohl. To start with, Bengt thank you for providing motivation, many insightful comments, and furthermore for your eagerness to understand and question everything; this has been the trigger for some of my best ideas. Thank you Leo, your never ending conviction towards future opportunities is unparalleled. Moreover, your ability to apprehend the greatness of the small things creates meaning in what I do. Jochen, your extraordinary ability to boost ideas and angle them in every possible way has without doubt given me endless inspiration. On top of that the atmosphere always seems to become more joyful when you enter a room. I don't know how you do it, but everything just seems to become more fun. You must share that secret someday.

To the management, Stefan Edlund and Inge Johansson, I've said it before but it deserves to be said again, your incredible belief in individual creativity and trust is truly honourable. Dr. David Cole, thank you for never giving up on our cooperation and for providing your expertise in a field unknown to me. Next I would like to thank Björn Eriksson, Dr. Johan Hultén, Ulf Löfqvist, and Henrik Weiefors, all from Sentient. Here I think a quote by Newton is in order 'If I have seen further, it is by standing on the shoulders of giants.' To my roommate, Peter Nilsson, you gave me inspiration to actually start doing a Phd. Today I am most grateful for that. And thank you for many fruitful discussions and joyful moments. Thank you Gustav Neander, Jan-Inge Svensson, Carl-Johan Hoel, Sachin Janardhanan and Johan Eklöv for helping me when preparing my experiments. To all involved in my final simulator study at VTI, in particular Bruno Augusto and Jesper Sandin, a big thanks. Without you it would not have been possible. All members of the Vehicle Control Team at Volvo, thank you for linking me into the real world of product development. The Vehicle Analysis group at Volvo, many thanks; you have all contributed. Colleagues at Chalmers; Adi, Anton, Fredrik, Pär, Derong, Gunnar, Sixten, Toheed, Artem, Manjurul and Mathias—surrounded by minds like you what more can I say. The ladies who have helped me keep track of the oh-so-important administration, Sonja, Marianne and Britta many thanks. And thank you to all the others who are not mentioned for making my days at work enjoyable.

Last but not least, I would like to thank my family and friends. You have all contributed with support, inspiration and joyful moments. Josefin—your strength and support is divine. Together with Gustaf you shape the why in my life.

Kristoffer Tagesson
Göteborg, May 2017

List of Publications

The following publications comprise the foundation of this thesis:

Paper I: K. Tagesson, B. Jacobson, and L. Laine, "The influence of steering wheel size when tuning power assistance", *International Journal of Heavy Vehicle Systems*, vol. 21, no. 4, pp. 295–309, 2014

Contribution: The study was designed, run, analysed and authored by Tagesson. Both Laine and Jacobson contributed with good ideas and in reviewing.

Paper II: K. Tagesson and D. J. Cole, "Advanced emergency braking under split friction conditions and the influence of a destabilising steering wheel torque", *Vehicle System Dynamics*, vol. 55, no. 7, pp. 970–994, 2017

Contribution: The experiment was designed, run and analysed by Tagesson. The mathematical model was implemented by Cole. Authoring was done by both Tagesson and Cole.

Paper III: K. Tagesson, B. Jacobson, and L. Laine, "Driver response at tyre blow-out in heavy vehicles & the importance of scrub radius", in *2014 IEEE Intelligent Vehicles Symposium*, IEEE, 2014, pp. 1157–1162

Contribution: The study was designed, run, analysed and authored by Tagesson. Both Laine and Jacobson contributed with good ideas and in reviewing.

Paper IV: K. Tagesson, L. Laine, and B. Jacobson, "Combining coordination of motion actuators with driver steering interaction", *Traffic injury prevention*, vol. 16, S18–S24, 2015, sup1

Contribution: The study was designed, run, analysed and authored by Tagesson. Both Laine and Jacobson contributed with good ideas and in reviewing.

Paper V: K. Tagesson, B. Eriksson, J. Hultén, J. Pohl, L. Laine, and B. Jacobson, "Improving directional stability control in a heavy truck by combining braking and steering action", in *International Symposium on Heavy Vehicle Transport Technology (HVTT14)*, 2016

Contribution: The study was designed and run, by Tagesson, Eriksson, and Hultén. Analysis of data was performed by Tagesson and Eriksson. Tagesson authored the paper. Pohl, Laine, and Jacobson contributed with good ideas and in reviewing.

Other relevant publications by the author, not included in the thesis:

[1] A. Sinigaglia, K. Tagesson, P. Falcone, and B. Jacobson, "Coordination of motion actuators in heavy vehicles using model predictive control allocation", in *2016 IEEE Intelligent Vehicles Symposium*, IEEE, 2016, pp. 590–596

[2] K. Tagesson, *Truck steering system and driver interaction*, Chalmers University of Technology, Thesis for degree of licentiate of engineering, 2014

[3] K. Tagesson, B. Jacobson, and L. Laine, "Driver response to automatic braking under split friction conditions", in *Proceedings of the 12th International Symposium on Advanced Vehicle Control*, 2014

[4] R. Roebuck, A. Odhams, K. Tagesson, C. Cheng, and D. Cebon, "Implementation of trailer steering control on a multi-unit vehicle at high speeds", *Journal of Dynamic Systems, Measurement, and Control*, vol. 136, no. 2, 2014

[5] K. Tagesson, P. Sundström, L. Laine, and N. Dela, "Real-time performance of control allocation for actuator coordination in heavy vehicles", in *2009 IEEE Intelligent Vehicles Symposium*, IEEE, 2009, pp. 685–690

Further information: One patent application has been submitted by the author in 2015, based on the subject of this thesis.

Contents

Chapter 1

Introduction

This chapter presents the background, motivation and objectives of the thesis. It also gives the limitations of scope and outline.

1.1 Background

The world tends to become smaller and smaller when considering how we perceive distance. We can get in contact with more or less anyone on our planet within seconds, we can meet physically within hours, and we can share products all over the world within days. The exploding development of information technology has of course been one big reason for how this has been made possible. A clear example of this can be taken from China, where the proportion of adults who own a smartphone has increased between 2013 and 2015 from 37% to an astounding 58% [6]. Moreover, the trend is similar in most developing countries. Even people in remote parts of the world have access to social media, they can book trips, and they can do business. Another, often forgotten factor behind why the world tends to become smaller and smaller is a constant development of our transportation system. The transportation system includes air, waterway, rail and road vehicles. In recent years our global transportation system has moved more people and more goods than ever before [7]. Transportation is an absolute necessity in the modern society that we have created. It is tightly connected to economic growth and creates opportunities for global trade and poverty eradication, as well as creating a stronger link between cities and urban areas [8].

Over long distances road vehicles, meaning motorcycles, passenger cars, buses and trucks, might not be the most efficient category of vehicles, but can be considered to be the most flexible category for moving people and goods over short and medium distances, meaning distances that are $\lesssim$500 km [9][1]. Trucks can transport goods to any destination

[1]Duration and pricing is often the main reason not to use road vehicles for long distance transportation of people. Here air and railway alternatives are often superior. For transportation of goods the following example in pricing reveals the shortcomings of road vehicles (rates provided by [9]). For about $800 a 20 foot container could be moved from New York to Shanghai by boat (air distance 11 871 km). If the same container was put on a domestic train a trip from New York to Kansas City would yield the same cost (air distance 1761 km). By truck the container would only get from New York to Richmond, VA (air distance 461 km).

right at the point where and when this is needed. People can travel individually or in groups, according to their needs, using cars and buses. Different types of road vehicles can share a common road. Furthermore, if one vehicle breaks down it will most often not affect other vehicles to any major extent. These and other attributes make road vehicles particularly suitable for usage in and around populated regions, as people create a basis for versatile needs. In high income countries this is also the present situation, where road vehicles have become an integral part of people's lives. Vehicles have furthermore become the most prominent example in history where humans interact with mobile machines. Low and middle-income countries will most certainly follow and show a similar example as the number of road vehicles is already growing steadily in these areas [10]. The domestication of the horse played a crucial role when forming early human societies. Now road vehicles play the same role when forming modern societies.

Road vehicles clearly fill needs in many ways, but with them come two major concerns. The first matter is the impact that they have on our environment. The transport sector accounted for 14% (10% when counting only road vehicles) of man-made greenhouse gas emissions in 2010 [11]. The urgency in this becomes clearer when considering that these emissions are created by a minority of people and that the remaining majority is expected to develop similar habits over the coming decades [12]. The second matter where road vehicles are associated with a major concern is road safety. In 2012 road traffic accidents represented the leading cause of death among people aged 15-29 years, according to the World Health Organization [10]. Most fatal accidents occur in low and middle-income countries. Moreover, most fatal accidents today are already preventable using existing intervention strategies, such as legislation, vehicle adaptation and road design [10]. However, even in countries where most criteria representing best practice for road safety are met, as defined by the World Health Organization, the number of fatal accidents is still too high. This can be realised by comparing road accident fatality rates with that of homicide. Countries like Australia, New Zeeland, and parts of Europe meet most best practise road safety criteria, yet the likelihood of dying in a road accident is around 3-6 times that of being murdered [10, 13]. Homicide is not tolerated by society and ditto must apply for road accidents, or as expressed by Tingvall and Haworth [14] 'safety cannot be traded for mobility'.

This thesis will focus on improving the road safety of heavy trucks. These vehicles account for about 5% (4% EU27) of all registered motor vehicles globally and about 25% (13% EU27) of the total travelled distance on roads globally[2] [10, 15]. In the following, best practice for road safety as set up by the World Health Organization will be assumed to be in place. Therefore only countries already fulfilling most criteria will be considered when analysing the present situation; these include Australia, New Zeeland and EU27. As an example, the US is excluded due to insufficient laws for drink-driving, speed limits, helmet wear, seat-belt usage, and the usage of child safety seats [10].

1.1.1 Heavy Truck Accidents

Heavy trucks are involved in accidents giving rise to about one out of six road fatalities in the studied region (Australia, 16%, 2015, >4.5 tonnes [16]; New Zeeland, 18%,

[2]Statistics of travelled distance of trucks is lumped with that of vans in [15]. Nevertheless, it is here assumed that the distance travelled by vans is negligible compared to that of trucks.

2015, >4.5 tonnes [17]; EU27, 17%, 2009, >3.5 tonnes [18]). Moreover, heavy trucks are involved in accidents giving rise to about one out of fourteen road casualties (Australia, 4%, 2014, >4.5 tonnes [19]; New Zeeland, 7%, 2015, >4.5 tonnes [17]; EU27, 7%, 2009, >3.5 tonnes [18]). When comparing the relative degree of fatalities against casualties it becomes clear that accidents involving heavy trucks more often lead to a deadly outcome than others. The most detailed and extensive analysis that is available in the studied region on accidents involving heavy trucks is presented by Volvo Trucks Accident Research Team [18]. This includes accident classification and root cause analysis on data from EU27. Identified common accident classes involving heavy vehicles that cause fatalities or severely injured victims are:

C1: Oncoming collisions with a car or another heavy truck (∼32% of victims)

C2: Various collisions between heavy trucks and unprotected road users, i.e. pedestrian, cyclist or motorcyclist (∼20% of victims)

C3: Collisions in intersections with a car or another heavy truck (∼15% of victims)

C4: Rear-end collisions with a car or another heavy truck (∼10% of victims)

C5: Single heavy truck driving off road (∼6% of victims)

About the root cause of road accidents in general the following statement is given 'Human error is involved in as many as 90% of all accidents' [18]. When considering only the analysed heavy truck accidents it is further stated that 'The two most common human factor related factors that contribute to heavy truck accidents are failure to look properly and failure to judge another person's path or speed. When the vehicle contributes to the accident, the most common cause is limited visibility due to blind spots.' Based on the details of the findings on accident cause and technology in reach Volvo Trucks Accident Research Team suggests prioritised areas for heavy trucks, amongst active safety systems, such as: headway support, lane keeping support, driver awareness support, vehicle stability, vehicle communication, and visibility support [18]. In common for the first four suggestions is that all address computer-controlled systems intended to alter the motion of the truck.

1.1.2 Available Active Safety Systems and Their Potential

Computers are in general very fast and exact in doing well defined tasks. Even small and cheap devices can, under certain conditions, outperform humans. For example in 2009 a smart phone won a chess tournament against several elite players [20]. Yet in more complex tasks that are not as clearly structured, humans are still superior because of our flexibility. Some examples are writing a newspaper, reading someone's mood, and cutting the nails of a one year old.

The task of driving is in many ways well structured. Lane markings show drivable area, traffic rules define how to relate to other vehicles, a wide range of sensors can be used to observe the surroundings, and a limited set of actuators can be used to alter the motion of the vehicle. For a human driver it can even become so structured that it leads to boredom and distraction. This is obviously not an issue for a computer. However, unstructured

elements also appear when driving. Fig. 1.1 provides an example of this. Lane markings vanish, lane edges are blurred, and road properties are highly uncertain. As unstructured elements often appear unexpectedly it is hard for a computer to outperform a human driver in terms of robustness against uncertainties. Yet the fact remains that human errors constitute the leading cause of all traffic accidents. Many of these errors seem easy for a computer, for example failure to judge another person's path or speed or covering blind spots. Ultimately the driving task should thus be possible to share between the driver and a supporting safety system; this can be called shared control.

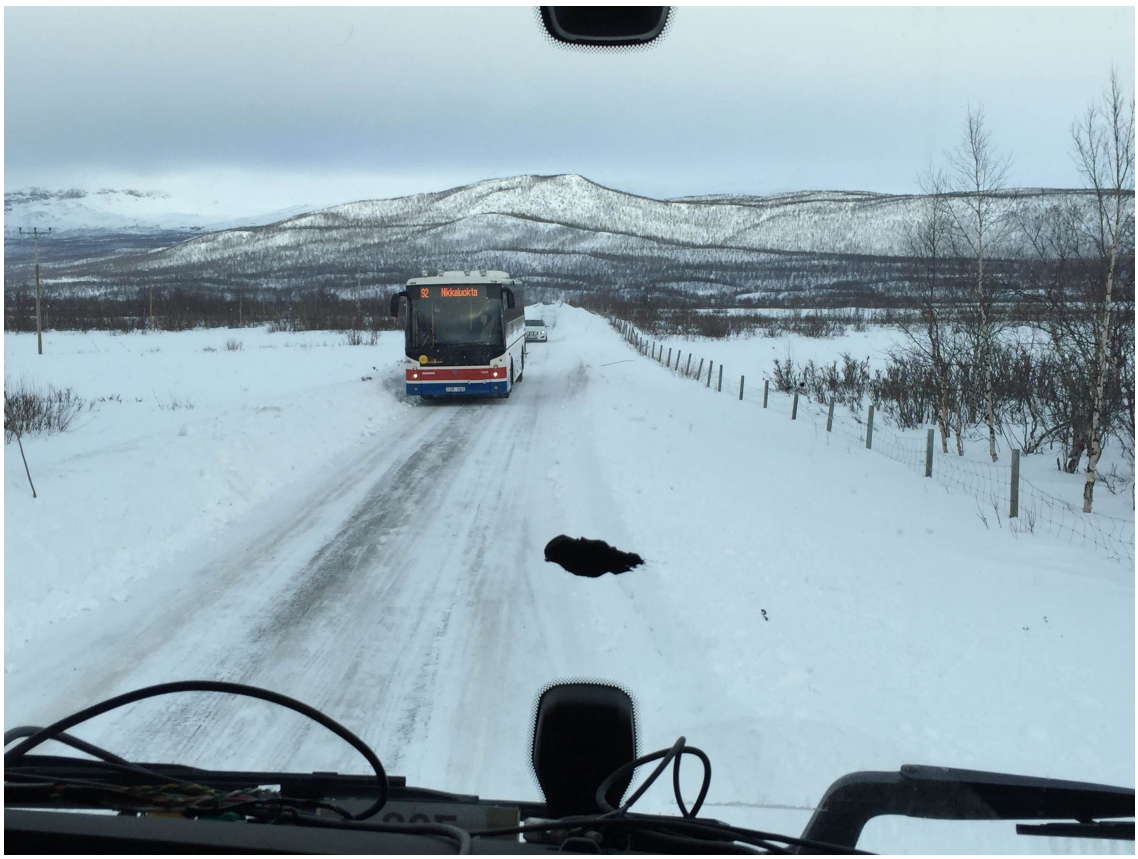

Figure 1.1: The task of driving is not always well structured. In this scene road edges are vague and an empty plastic bag creates a harmless threat.

There are already today many examples of effective safety systems operating under the principle of shared control in road vehicles. One example is electronic stability control (ESC) systems, which are supporting the driver in situations where the vehicle strongly deviates from its nominal steering response or risks rolling over. Based on data from the US, directional instability occurred in 9% of all accidents caused by a heavy vehicle from 2001 to 2003 [21]. This high rate of directional instability as a cause for accidents and a high rate of accidents caused by rollover together led to the introduction of, and later legislation requiring, ESC in heavy trucks both in the EU (2011) and in the US (2017) [22, 23, 24]. ESC systems have been shown to reduce the risk of crash involving loss of control for cars by about 40% [25]. Similar studies have not yet been performed for heavy trucks [26]. However Markkula *et al.* [27] showed in a simulator study, running a standard truck ESC system, that there are potential points of improvement; mainly regarding the

interaction between the driver and the ESC system. ESC uses individual wheel brake action to make the vehicle respond to driver steering commands more like during normal driving. The control is shared as the driver is using the steering wheel to follow the road and the ESC system is performing coordination of several brake actuators and is thus altering the motion of the vehicle.

Advanced emergency braking system (AEBS) is another example where control of vehicle motion is shared. AEBS developed for rear-end collision mitigation is already a legal requirement for heavy trucks in many countries, see e.g. [28], and under contemplation in others, see e.g. [29]. AEBS can prevent an imminent collision by automatically applying heavy brake action on the vehicle when the driver fails to respond. No statistical crash analysis has been performed for trucks. For cars fitted with available AEBS systems intended for low speed conditions Fildes *et al.* [30] conclude a 38% overall rear-end crash rate reduction. Cicchino [31] extends these findings by showing an even higher crash rate reduction, 50% (56% when only counting accidents with injuries), when the system is designed to operate also at higher speeds. For cars AEBS systems have also been developed to mitigate collisions with pedestrians [32]. Furthermore, AEBS has been mentioned in the media for its possible ability to prevent attacks where trucks are being used as terrorist tools [33]. New regulations in this direction would not come as a surprise when considering the recent horrible attacks committed in Nice, Berlin and Stockholm. Especially when considering the difficulties that arise when infrastructure instead is to be redesigned to ensure this type of safety [34]. This application, meaning AEBS designed to prevent terrorist attacks, shows that the need of AEBS to activate in additional unforeseeable use cases will grow even more as the future evolves.

One further example of an active safety system where the control of the vehicle is shared is lane keeping aid (LKA) which typically applies an assisting steering wheel torque to make it easier for the driver to maintain the intended lane. In this arrangement the system will not have direct access to the motion of the vehicle, as the driver must comply before the system can affect the motion of the vehicle. Yet, this is also sometimes referred to as shared control [35]. The effectiveness of LKA alone has not been estimated from real-world crashes so far as the installation rate is low [36]. One potential limitation that however can be foreseen with LKA is that presented by Cicchino and Zuby [37]. They found that 42% of all drivers causing a serious or fatal injury accident when drifting out of their lane were incapacitated, e.g. sleeping, and furthermore that only preventing their initial drift would not be enough, as they are unlikely to regain control fast enough.

Apart from safety systems that directly intend to change the motion of the vehicle there are also pure warning systems. These are developed with the intention to alter the behaviour of the driver and thereby avoid or reduce the impact of a collision. Examples of such systems are: lane departure warning system (LDW), forward collision warning system (FCW), and blind spot detection system. The effectiveness on safety of such systems is however not always evident. The Insurance Institute for Highway Safety [38] reports that FCW alone shows a reduction of 20% in rear-end crash rate of cars, clearly less than that of AEBS. LDW is mandatory in the EU on heavy trucks [39]. According to Reagan and McCartt [40] many car drivers turn off the LDW system. It is believed that people consider a lot of warnings as false. This can be further confirmed by the fact that the same drivers had their FCW systems turned on; a system known for less frequent warnings. The fact that people turn off LDW is believed to be a major limitation in the

crash reduction potential. In a study performed by Sternlund *et al.* [36] it was however shown that LDW systems mounted into Volvo cars reduced the risk of head-on and single vehicle injury crashes on Swedish roads by 30% (±24% at 95% CI). They further point out that the inability of these systems to operate under icy/snowy conditions lowered the potential reduction.

1.1.3 Predicting the Impact of Active Safety Systems on Accident Categories

Clearly there are a number of active safety systems available on the market, whereof some show promising potential in certain situations. By projecting the observed safety potential of the mentioned active safety systems onto the listed categories of accidents in section 1.1.1 it is possible to determine the remaining gaps. However, first two things need to be clarified. To start with, the classification of accident types that was presented in section 1.1.1 was based on accident statistics dated earlier than the introduction of legal requirements for ESC, AEBS, and LDW in the EU [18, 23, 28, 39]. The take rates of such systems were low prior to the time that the regulations entered into force on heavy trucks. The systems are therefore believed to only have a minor effect on the classification as presented. Second, road traffic safety relies on good practise in road design, as well as vehicle design. It is here believed that since no solution to a road safety problem is 100% effective, and at the same time practically feasible to implement, the only option is to develop both safe roads and safe vehicles. As an example, median barriers would be very effective at preventing oncoming accidents, but due to their high cost they cannot be installed on all roads [41]. Hence, vehicles must also be designed to reduce the likelihood and consequence of an oncoming accident. Furthermore, it is not only the vehicle that is directly causing an accident that should be designed to prevent or reduce the same. Sometimes a higher safety improvement can be reached by also redesigning other vehicles. An example of this is the rear under-run protection device for heavy trucks that has been legally required in Europe for many years [42]. With this background, the focus here is safe heavy trucks and truck combinations; the accident classes will therefore be analysed on the basis of these vehicles.

Category C1, oncoming collisions, owing to the highest number of victims, is characterised by a high relative velocity and consequently a very short period wherein the accident can be prevented [43]. The most common case is a car drifting outside its intended lane. For this case there is currently a complete lack of mature and effective countermeasures on the market developed for heavy trucks. The most obvious solution would be to extend existing AEBS to trigger also for oncoming targets. An alternative to AEBS would be to support the driver of the truck to initiate a steer manoeuvre in order to avoid a collision. For cars, steering has been found more effective than pure braking, when speed is high and when the required lateral displacement is low [44]. Moreover, in the case where the truck is drifting out of its lane and is causing an oncoming accident, LDW and LKA installed in the truck might potentially be effective. Yet, as has already been pointed out, the systems must be designed so that drivers prefer having them on. Furthermore, as discovered by Cicchino and Zuby [37] a large group of drivers, more precisely 42%, who unintentionally had drifted out of their lanes had been incapacitated. In these cases it would not be enough to only prevent the initial drift. Instead a more effective method

would be to take the vehicle to a safe stop, including also lateral control. Summing up, currently available active safety systems developed for heavy trucks will not likely create a major reduction of category C1 type accidents. More efforts are required in the development of AEBS systems and lateral avoidance support to meet the envisioned goal of reducing fatalities associated with truck accidents..

Next, category C2, involving unprotected road users, is characterised by a low or medium truck speed [18]. Here the most prevailing solution would be to extend AEBS systems with sensors capable of detecting unprotected road users. This has also been proposed by Jia and Cebon [45]. Over a short time period no reduction can be anticipated, as no support is yet on the market, but after having introduced the mentioned techniques it would be possible to hinder a great proportion of C2 type accidents. The most important direction here would be sensor development, for pedestrian and cyclist detection.

Category C3, collisions in intersections, is characterised by low speed and poor visibility. No safety system is yet available on the market for this purpose. Better sensors and future vehicle to vehicle communication systems could be incorporated as a trigger for AEBS also in this case.

For category C4, rear-end collisions, it is most likely that the introduced legal mandates for AEBS will reveal a reduction in due time. The pace will correspond to the pace at which new trucks are replaced by old ones.

The last category C5, run off road, will likely reduce as LDW has become mandatory considering the effects that it has had on cars equipped with LDW [36]. Yet it seems like the limiting factor is system acceptance, which clearly is hard to conquer with a pure warning system [40]. Thus also lateral assistance systems would be required. LKA is one example. However, if only a guiding steering wheel torque is provided the effectiveness is not obvious when the driver is incapacitated [37]. There is thus a need to develop a lateral support system that can also handle these situations, where a driver drifts out of the intended lane. One way would be to override the driver by applying overlaid steer action, e.g. steering by braking, and taking the vehicle to a safe stop. Run off road does not only occur due to slow unintended drifting. There are also situations where instability causes the vehicle to leave the road. Here ESC will most certainly reduce the number of accidents. Yet, as has been pointed out earlier, the interaction between the driver and the system can be improved. Also existing ESC systems do not incorporate surrounding sensors. This means that the support that is provided does not necessarily correspond to the geometry of the road.

All in all it is clear that further development of available safety systems is needed in order to reduce road fatalities where trucks are involved. Development of sensor systems and decision making algorithms can heavily expand the utility of AEBS. This would however increase the overall activation rate of AEBS, i.e. the exposure, and consequently place higher requirements on the robustness of it. One very important aspect to consider here is the effect that AEBS can have on the lateral dynamics of the vehicle. Split friction roads provide an example where heavy braking can cause lateral deviation. Lateral deviation as a result of AEBS activation could potentially cause an even more severe accident than the one initially targeted by the system. This is not currently addressed in existing legislation [28]. Moreover, there is also a need for a more effective lateral motion support strategy, other than only pure steering wheel torque guidance. It has also been observed that existing ESC systems can be improved and become more effective by changing how

they interpret the driver. As an example the steering wheel angle signal, which is exclusively used in ESC today to compute driver intentions, does not always correlate with desired road curvature as the vehicle exhibits over- and understeer. In total this means that there is a need for a more effective overall longitudinal and directional control strategy for truck combinations than already exists. It should furthermore be capable of combining the strength in human flexibility and a computer's ability to handle structured problems. This will be denoted here as driver-centred motion control.

1.1.4 Vehicle Motion Control

The lateral stability of an articulated truck combination during heavy braking was extensively analysed in the 1950s, 1960s, and 1970s [46]. The main instability modes considered were snaking, jack-knifing and trailer swing-out. The work led to the introduction of automatic load dependent brakes and anti-lock braking system (ABS) and eventually to legal requirements for such systems [47]. Today, many heavy trucks have electronically controlled braking systems. This makes it possible to achieve exact brake distribution, and thereby good directional stability in general. This has also served as an enabler for ESC, which requires individually controlled wheel or axle brake action.

The drivetrain has historically not been considered as an effective motion actuator for active safety systems due to its slow dynamics and fix coupling to multiple wheels. Instead the brake system has formed the only system, possible to control via software, used for motion actuation in heavy trucks active safety systems up until today[3]. However, in recent years electronically controlled power steering has also been introduced on the heavy truck market [49, 50]. Electronic power steering (EPS) has been available for all categories of cars since some years back [51]. EPS makes it possible to involve also steering when controlling the motion of the vehicle with software. Yet, as EPS is acting on the steering system, which is linked to the steering wheel, it is not possible to control the motion of the vehicle directly, as the driver first must comply. A combination of braking and steering yields the most powerful way of controlling the directional motion of a vehicle. Therefore it is still of utmost interest to combine the two and, in the prolongation, potentially save lives. To achieve this in an effective way two major fundamentals remain: i) the behavioural response of a driver must be studied and ii) driver-centred motion control, for combined braking and steering, should be developed on the basis of said driver behaviour.

1.2 Objectives

The objective of this thesis is to develop a conceptual design for performing driver-centred motion control for heavy trucks and heavy truck combinations. As this will be a recurrent expression throughout the thesis it is therefore here formally defined:

[3]Trailer steering systems and truck rear axle steering systems have also been proposed for usage in active safety systems [4, 1, 48]. However, the associated added cost has so far strongly limited the corresponding market share. Another type of actuator that should be mentioned is the electric drivetrain. This is a strong candidate for future involvement in motion control as it is known to have very fast dynamics. The current market share is however very low, which is why it is excluded here.

***Definition**: Driver-centred motion control is a combined longitudinal and directional control strategy for truck combinations that should be capable of combining the strength in human flexibility and a computer's ability to handle structured problems (see section 1.1.2). It should furthermore be derived from observations of how human drivers behave.*

For practical reasons the shorter term 'motion control' will occasionally also be used in this thesis. Moreover, the ambition is to develop the overall structure of this concept, rather than the complete solution with validated software that would be required of a system ready for usage on the market. The ambition is further to consider braking and directional control in this context and to leave propelling features for future work, as accident reduction and safety are the focus. The starting point when developing the method will be the driver, whom is considered to act and share the control along with a vehicle motion control system. Also, the aim is to strive for a balance between braking and steering forces, as this in many ways is more optimal than when the two are controlled separately.

One clarification that should be made is on what horizon and on what functional level the intended vehicle motion controller should operate. As presented by Albus *et al.* [52] a control system for a vehicle can be developed in a layered format. The architectural reference model, known as the 4D/RCS reference model architecture, presented by Albus *et al.* is one example of how this can be achieved. The 4D/RCS reference model architecture can furthermore be used to define the intended scope of the method here targeted. As illustrated in Fig. 1.2 all layers are working towards a common mission in the 4D/RCS reference model architecture. Yet, each layer is specifically developed to manage difficulties that are of highest importance under a certain time horizon. The highest layer is denoted 'battalion' and operates with a typical horizon of 24 h. In the context of civil truck operation this could instead be denoted fleet management. Here the obvious mission is to optimize utilisation of fleet resources. The lowest layer is denoted 'servo' layer. This layer operates on a typical horizon of 0.05 s. A typical example would be ABS control of brakes, or other local control systems, coupled to a certain motion actuator. Above the 'servo' layer comes the 'primitive' layer, working on a typical horizon of 0.5 s. This layer is responsible for coordination of motion actuators in order to follow speed profiles and to follow paths set by the higher layers. This level corresponds to where the intended vehicle motion controller is supposed to operate; in other words coordination of motion actuators for decelerating and directional management.

As the driver will be a strong part of the controlled loop, where the motion controller acts, it is important to analyse how a driver responds to certain basic stimuli. With respect to the mission of the motion controller the most important aspects are how a driver responds to steering wheel torque and how a driver responds to a combination of deceleration and yaw disturbance. The motion controller should thereafter be developed in compliance with these observations in order to achieve a more effective overall longitudinal and directional control strategy for truck combinations than existing systems.

One further objective relates to the fact that trucks and truck combinations come in many variants, considering e.g. number of units, length, number of axles, coupling positions, and coupling types. It is therefore important that the basic principles being developed are generic in the sense that they can be adapted easily to any unique truck combi-

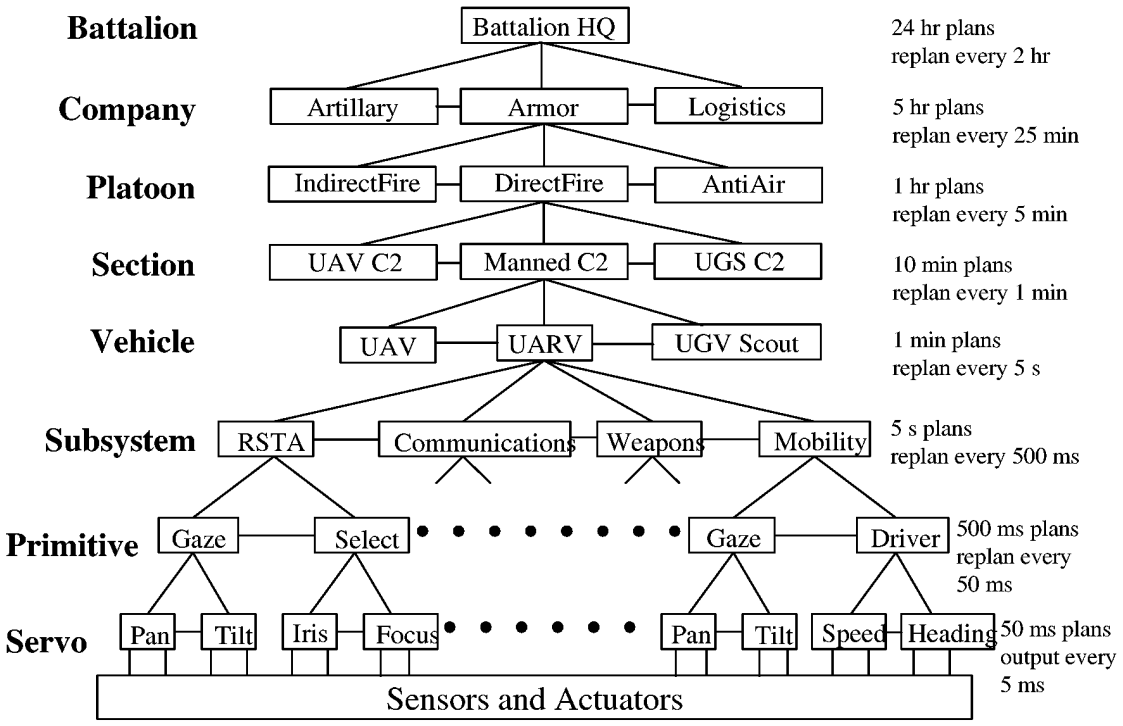

Figure 1.2: A high level abstract representation of the 4D/RCS reference model architecture. Picture taken from [52]. Reprinted courtesy of the National Institute of Standards and Technology, U.S. Department of Commerce. Not copyrightable in the United States.

nation. The motion control method is further intended to be generic in the sense that it should handle any scenario and enable effective lateral motion control at its limits. It will also be evaluated in a number of scenarios selected on the basis of the above outlined gaps for active safety systems, see section 1.1.3. The selected scenarios are: i) AEBS braking on a split friction surface, ii) directional stability control under low friction conditions, and iii) oncoming collision avoidance.

In summary, the objective of this thesis can be divided into three parts: i) understanding how truck drivers behave when the vehicle is exposed to a yaw disturbance, while the vehicle decelerates, and what effect a steering wheel torque has, ii) using information about driver characteristics to develop an effective controller for combined lateral and longitudinal motion control (driver-centred motion control), and iii) evaluating the controller in some scenarios where many accidents occur. These three parts will together form a basis for a potential future reduction in accidents owing to all accident categories, earlier listed in section 1.1.1.

1.3 Limitations

Material, methods and applications that are not handled in this thesis are listed here:

- Only software changes will be targeted and not fundamental hardware changes of existing vehicle technology. This is believed to provide a more cost effective

approach and thus a higher chance of the technology being adapted. A steer-by-wire system is an example of a fundamental hardware change. It is therefore excluded.

- Sensors or sensor fusion technology will not be examined.
- As described by Aust *et al.* [53] it is possible to define three steps in an active safety system: 'Detection', 'Decision Strategy', and 'Intervention Strategy'. The steps 'Detection' and 'Decision Strategy' are not a focus here.
- The only vehicle types considered are heavy trucks and truck combinations with a gross combination weight above 3.5 tonnes.
- Haptic warnings formed by pure vibrations, i.e. high frequency steering wheel torque input not acting in any specific direction will not be examined.
- Auditory and visual warnings could possibly be combined with other modalities in critical situations, e.g. steering wheel torque guidance. These combinations are not investigated here.
- When control methods are developed a single front axle truck is assumed. The design can however be extended for double front axles, after some modification.
- When control methods are developed the powertrain is omitted. The design can however likely be extended to include also this to enable propelling features.
- Electric and hydraulic retarders, used for additional brake actuation, are not considered when control methods are developed. These are however possible to include after some minor modification.
- Typical low speed features, such as hill-start aid are not considered.

1.4 Main Scientific Contributions

The main contributions from the research that has lead up to this thesis are:

- A set of general rules for how to scale steering wheel torque when vehicle properties change. These can enable easier transfer of steering technology between different vehicle types.
- Existing studies indicate that when applying superimposed steering wheel torque to guide a driver there are two important factors to consider: i) the time scale of the required change, and ii) the cognitive objectives of the driver. This theory has been further strengthened here as a results of experimental, modelling and analysis work.
- A novel motion control method, for heavy truck combinations, has been developed that is derived from observations of how drivers behave and from vehicle dynamics. The method has furthermore been proven to show traffic safety benefits. The novelty of the method lies in: i) the incorporation of quadratic real-time friction

constraints, ii) that driver state and capabilities are considered when prioritising the use of different motion actuators, and iii) an alternative approach to interpret driver intention during limit-handling conditions.

- The danger in activation of AEBS under split friction conditions has been quantised. These results should be considered when the number of scenarios targeted by AEBS continuous to grow.
- The consequences of having a large positive steering offset at ground, in the steering system, have been quantised in two extreme scenarios. Results indicate that when a driver is holding the steering wheel the consequences are limited. This does not hold when a driver has let go of the steering wheel.
- Several novel experiments have been performed where driver behaviour has been examined. This has created better understanding of the involved behaviour and perception of the driver and the closed loop system driver and vehicle.

1.5 Thesis Outline

The thesis is structured as follows. Chapters 2 and 3 present, in order, the fundamentals of a truck's steering system and a truck's braking system as these are central topics throughout the thesis. After this, chapter 4 presents findings on how drivers respond to stimuli of relevance to vehicle motion control. These findings serve as input to chapter 5 where a general method for driver-centred motion control is proposed. The method is thereafter evaluated in three scenarios in chapter 6. Overall findings about driver behaviour and vehicle motion control are concluded in chapter 7, where future priorities also are suggested. Finally, chapter 8 summarises the underlying papers that are appended at the end of the thesis. Notations used in the thesis comply with ISO 8855 [54] with the exception that vector arrows are removed. Units are SI unless otherwise stated.

Chapter 2

Truck Steering System

A steering system provides directional control of the vehicle and thus composes an important motion actuator. This chapter presents an overview of the steering system in a heavy truck and also relevant characteristics thereto, as a background to the core of the thesis where several motion actuators are to be synchronized. An earlier edition of the chapter has originally been published in licentiate thesis [2].

2.1 Conventional Steering System

The power required when steering a truck is very high compared to a car. This becomes obvious when considering the relative difference in front axle load, where a standard car carries 750 kg and many heavy trucks up to 7500 kg. The most common front axle steering arrangement of a heavy truck includes a hydraulic steering gear. A hydraulic steering gear provides high power in comparison to its volume. Rear drive axles are in general not steered. However on other rear axles steering is sometimes seen. The steering principles of these axles are often of simple nature, having the purpose to avoid tyre wear or shorten the effective wheelbase at low speed. Rear axle steering has an effect on vehicle response and manoeuvrability but not directly on steering wheel forces and will therefore not be described further.

The different parts of a conventionally steered front axle on a truck are shown and explained in Fig. 2.1. A steering wheel angle movement essentially results in a movement of the steer angle down at the wheels. The left and the right wheel steer angles are tied together with the track rod. The geometry of how the track rod connects to the steering knuckles should be chosen to produce a proper level of Ackermann, i.e. more steering on the inner wheel in corners.

The geometry of the steering knuckle, or more specifically how the kingpin bolt is oriented, creates the basis for how forces acting on the wheels propagate into the steering system. In Fig. 2.2 an installation of a Volvo FMX is shown. Of particular importance are two angles, kingpin inclination and caster. These will be defined in the following sections. For this purpose two axis systems will first be defined. In accordance with ISO 8855 [54], $X,\ Y,\ Z$ are used to denote the intermediate axis system, where X is directed horizontally forward on the vehicle, Y points horizontally left when facing forwards, and Z points upwards. Furthermore the vehicle axis system, $X_V,\ Y_V,\ Z_V$, is introduced. It is

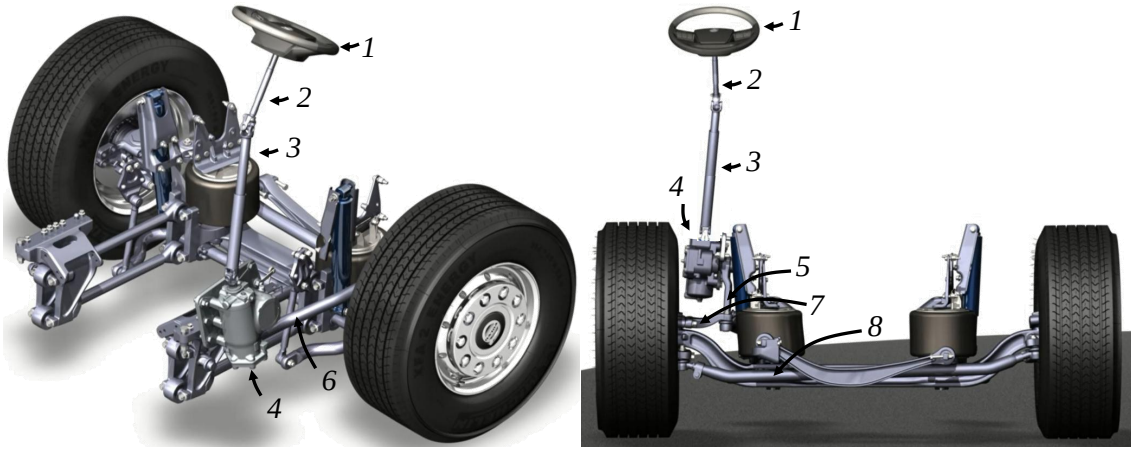

Figure 2.1: A conventional steering system from a left-hand drive Volvo is shown from front left-hand side in the left subfigure, and from the rear in right subfigure. The steering wheel (1) is connected via the steering column (2) and the steering shaft (3) to the hydraulic steering gear (4). The steering gear amplifies the steering wheel torque and produces a downshift from the incoming shaft angle to the angle of the Pitman arm (5), also known as the drop arm. The Pitman arm is connected via the drag link (6) to the upper steering arm (7) which controls the angle of the steering knuckle around the kingpin bolt. The left and the right wheel steer angles are made dependent via the track rod (8).

fixed on the vehicle sprung mass so that X_V is directed forward on the vehicle, Y_V points left, and Z_V points upwards. Note that the vehicle axis system follows e.g. roll and pitch motion of the sprung mass, whereas the intermediate axis system does not.

2.1.1 Kingpin Geometry

The steering axis, also known as the kingpin axis, is the axis about which the wheel rotates relative to the vehicle structure when steered. For a truck with conventional steering this axis runs through the kingpin bolt. The kingpin inclination angle, σ, is the angle between the Z_V-axis and the steering axis, projected onto the $Y_V Z_V$-plane, see the left part of Fig. 2.3. The kingpin inclination angle on trucks is normally around 5 degrees, and is normally higher on cars [55]. The lateral component of the distance between road wheel contact centre and the steering axis, see the left part of Fig. 2.3, is known as the steering-axis offset at ground[1], r_k. On heavy trucks the steering-axis offset at ground ranges from 5 to 15 cm, depending on the exact tyre and rim being used. On cars this value is often closer to zero or even negative.

[1]In ISO 8855 [54] r_k is referred to as the steering-axis offset at ground or kingpin offset at ground. Gillespie [55] refers to it as the kingpin offset at ground or the scrub and Milliken and Milliken [56] as the scrub radius. The term scrub radius is differently defined in ISO 8855 [54] as the distance from wheel contact centre to the point where the steering axis intersects the ground, i.e. also affected by caster. In this thesis steering-axis offset at ground will be used to denote r_k. However in Paper III r_k is referred to as the scrub radius.

Figure 2.2: The kingpin bolt, also known as the spindle bolt, is angled to produce proper steering characteristics. A red line is included to visualise the slant.

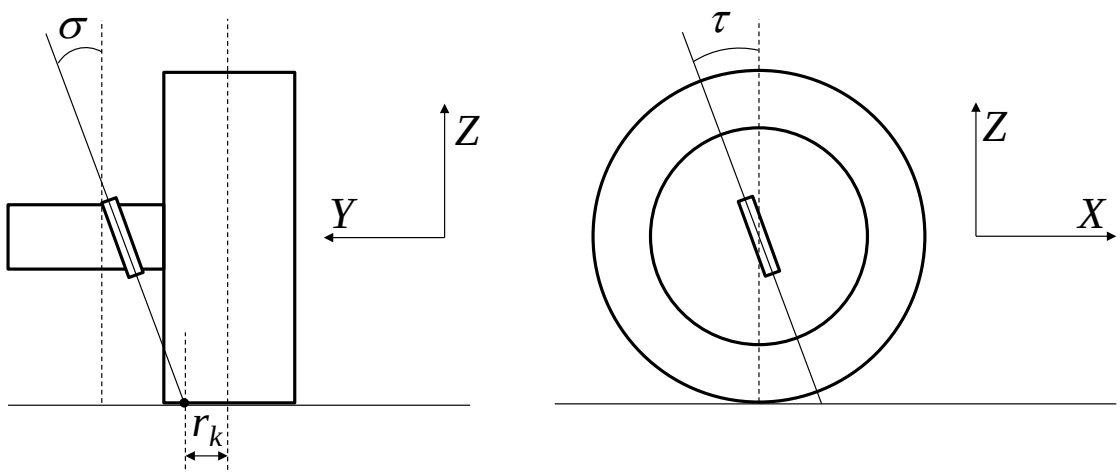

Figure 2.3: The tilt of the kingpin bolt can be decomposed into kingpin inclination and caster.

2.1.2 Caster Geometry

The caster angle, τ, also known as the castor angle, is the angle between the Z_V-axis and the steering axis, being projected onto the $X_V Z_V$-plane, see the right part of Fig. 2.3. For heavy trucks a typical caster angle is 5 degrees at standstill. Note that during e.g. heavy braking, when the vehicle pitches forward, the caster angle will reduce and can even become negative.

2.1.3 Steering Wheel

Steering wheels can be seen on old cars dating back to around 1900. Before that tiller steering was the state of art[2]. The steering wheel provides two main dimensions, steering wheel angle, δ_h, and steering wheel torque, M_h. The relation between these two is here referred to as steering characteristics. The diameter of the steering wheel is important from two perspectives; it acts as a lever arm for the driver and it also strongly influences the total inertia of the steering system. In heavy trucks it is larger than for cars, as a consequence of legislation. As stated by UNECE [57] (Addendum 78, Regulation No. 79) the driver should be able to manoeuvre with limited steering forces also in the case of an assistance failure. This is achieved by designing the steering system so that the required force to steer the vehicle is limited, even without assistance. With a common wheelbase and steering ratio this typically means a steering wheel diameter of 45-50 cm on modern heavy trucks. Moving away from conventional steering system arrangements may well change these constraints.

2.1.4 Steering Gear

A hydraulic steering gear is shown in Fig. 2.4. On the incoming axle, from the steering shaft, a torsion bar is located. This torsion bar causes the opening and closing of valves for hydraulic high pressure fluid. The steering shaft also turns a ball screw, known as the worm. The high pressure fluid also acts on the worm to amplify the torque applied by the driver. The other member of the ball screw causes the outgoing axle to turn the Pitman arm. The principle is used on most heavy trucks [58]. The design of the valves within the hydraulics has a large influence on the amplification characteristics and therefore also on the steering characteristics. The amplification characteristics are often visualised with hydraulic assistance pressure as a function of torsion bar torque, see e.g. [58]. This curve is known as the boost curve. In a heavy truck a common ratio between the incoming and outgoing shaft angle is within the range 16:1 to 27:1. The ratio is often nonlinear, with a higher ratio closer to end stops. This contributes to the earlier stated requirement that it should be possible to manoeuvre the truck also in the event of a hydraulic failure [57].

The steering gear together with the linkage geometry produce the overall steering ratio, i_s, between the steering wheel angle and the average of the two wheel steer angles, δ. Where δ is formed by the X direction of the vehicle and the horizontal direction of the respective wheel. The steering ratio i_s is defined when no load is applied to the steering system. The ratio, as mentioned before, is dependent on the angle. In a heavy truck i_s is

[2] A tiller is a lever that on cars was attached to the steering mechanism. It was directed backwards, as opposed to what is often seen on boats.

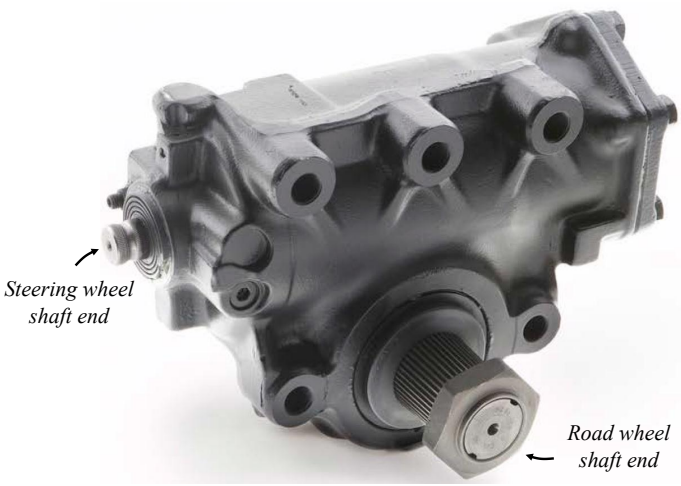

Figure 2.4: A steering gear provides high power in relation to its volume.

in general close to the ratio provided by the steering gear for small steer angles, but will show a deviation for large steer angles when relay linkages induce nonlinearities.

When loading is added to the steering system, e.g. forces from wheel road interaction, the actual ratio can deviate substantially from i_s. This is due to compliance in the steering system. Here the torsion bar within the steering gear dominates [58]. Some trucks might even require that the steering wheel angle is doubled when the axle is loaded, compared to when no load is carried, in order to produce the same wheel angle [55]. This phenomenon adds understeer, as experienced by the driver, since more steering is required when negotiating a curve at increased speed.

2.1.5 Equivalent Wheelbase

Wheelbase, l, is defined for a conventional two-axle vehicle, with a steered front axle and an unsteered rear axle, as the longitudinal distance between the front and rear axle wheel contact centre. For vehicles having more than one rear axle the equivalent wheelbase, l_{eq}, is instead introduced. This describes the wheelbase of a two axle vehicle with similar steady state turning behaviour as the multi-axle vehicle [59, 54, 60]. When assuming linear tyre forces and a solo front axle the equivalent wheelbase can be calculated as

$$l_{eq} = L(1 + \frac{T}{L^2}(1 + \frac{C_{\alpha R}}{C_{\alpha F}})) \tag{2.1}$$

where L is the wheelbase of the real vehicle calculated as the distance from the front axle to point zero, defined as the point where the moments generated by vertical loads of the rear axles add up to zero. $C_{\alpha F}$ and $C_{\alpha R}$ are front cornering stiffness and the sum of rear cornering stiffnesses respectively. T is the tandem factor which is calculated as

$$T = \frac{\sum_{i=1}^{N_r} \Delta_i^2}{N_r} \tag{2.2}$$

where N_r is the number of rear axles and Δ_i is the longitudinal distance from axle i to point zero. From Eq. (2.1) it is seen that a multi-axle vehicle will be perceived as longer

than its geometrical wheelbase, L. Most linear theory on ground vehicles can be used simply by substituting the wheelbase, l, for the equivalent wheelbase, l_{eq}, [59].

2.1.6 Steering Response

Steady state steering response of a vehicle is commonly measured in terms of lateral acceleration gain or yaw rate gain. Lateral acceleration gain, $\frac{\partial a_Y}{\partial \delta_H}$, is the relation between change in lateral acceleration and change in steering wheel angle input, where lateral acceleration is denoted a_Y. In the steady state linear region it holds that

$$\frac{\partial a_Y}{\partial \delta_H} = \frac{a_Y}{\delta_H} = \frac{v_X^2}{l_{eq} + K_u v_X^2/g} \frac{1}{i_s} \tag{2.3}$$

where K_u is the understeer gradient having the unit rad, v_X vehicle longitudinal velocity and g the gravitational constant. Yaw rate gain, $\frac{\partial \omega_Z}{\partial \delta_H}$, is the relation between change in yaw rate and change in steering wheel angle input. In the steady state linear region it holds that

$$\frac{\partial \omega_Z}{\partial \delta_H} = \frac{\omega_Z}{\delta_H} = \frac{v_X}{l_{eq} + K_u v_X^2/g} \frac{1}{i_s} \tag{2.4}$$

Fig. 2.5 shows a typical steering response for a tractor towing a semi-trailer and a rigid truck as the longitudinal velocity varies. The relative difference in steering response is obvious between the tractor and the truck. It is mainly a longer wheel base of the rigid truck that implies larger steering wheel movements when negotiating the same curve.

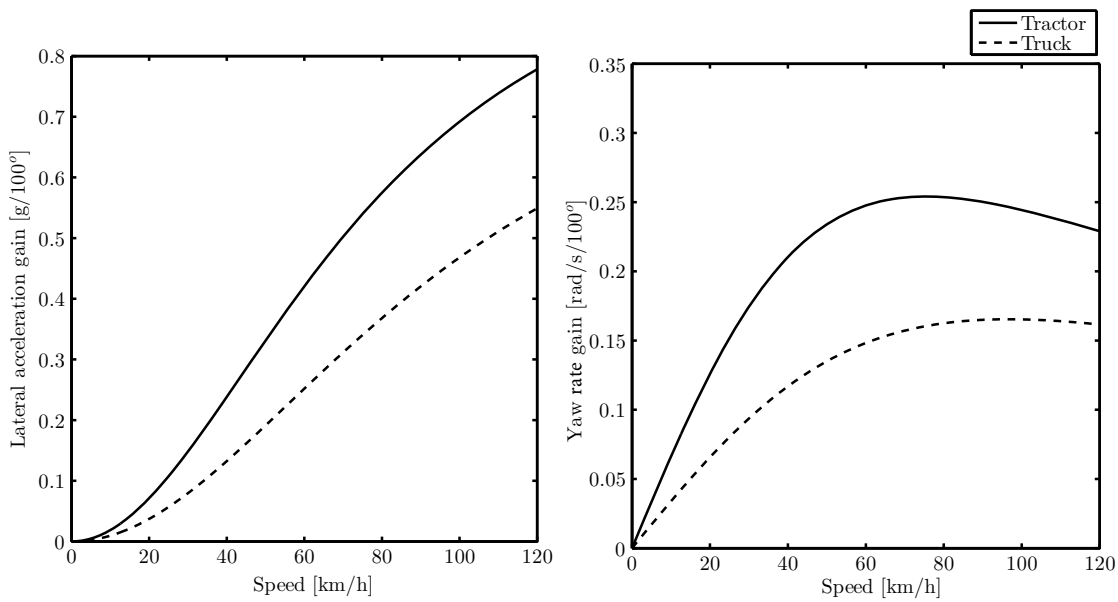

Figure 2.5: Typical steering response shown for a semi-trailer tractor unit and a rigid truck.

2.1.7 Steering Dynamics

When considering transient yaw motion of a truck the full dynamical system should be considered where the steering wheel angle forms the main input. A typical step response of a tractor and semi-trailer combination is shown in Fig. 2.6. The yaw rate of the truck unit has an approximate time constant of 250 ms, when modelled as a first order system. The yaw rate of the trailer does not exhibit dynamics similar to a first order system, but a first order system, with a time constant of 400 ms, combined with a 250 ms time delay can be used as a rough approximation.

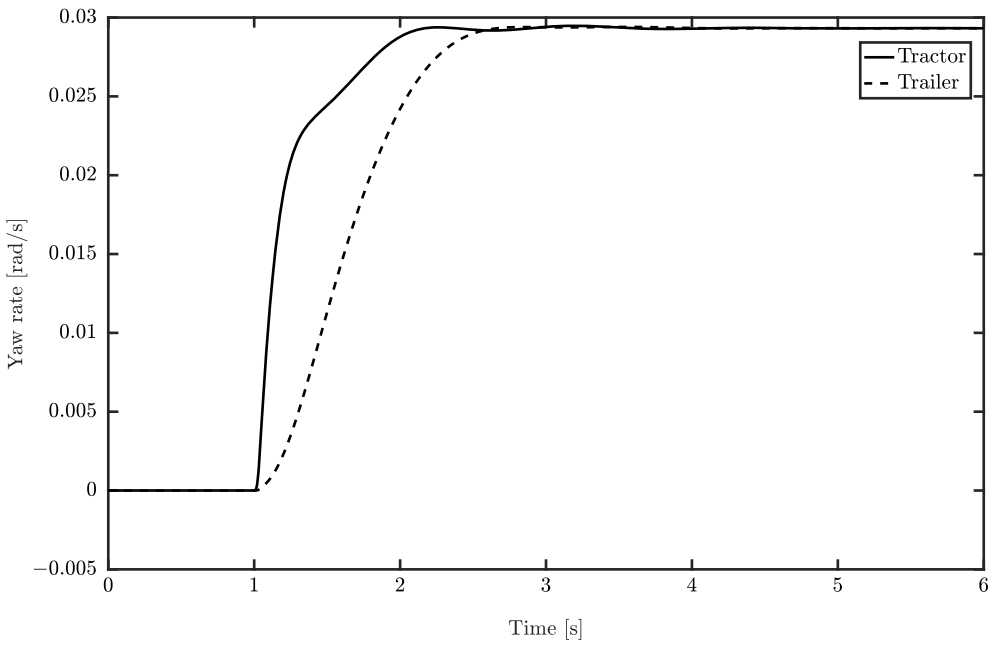

Figure 2.6: Typical yaw rate response of a tractor and semi-trailer combination to a 10° steering wheel angle step. The combination is travelling at 80 km/h and the step is applied after 1 s. The values have been produced by a high fidelity model. The model has been verified with respect to real step response measurements.

2.1.8 Ackermann Geometry

In theory left and right wheel steering angles should be chosen so that the rotation axes always intersect in one point, around which all wheels rotate. This would provide the highest degree of manoeuvrability and lowest tyre wear. At low speeds these steering angles can be derived purely from vehicle geometry. This is known as Ackermann geometry. The relation between left wheel steer angle, δ_L, and right wheel steer angle, δ_R then becomes

$$\frac{1}{\tan \delta_R} = \frac{1}{\tan \delta_L} + \frac{b}{l_{eq}} \tag{2.5}$$

where b is the lateral distance between the left and right tyre contact patch, known as track. An alternative to Ackermann geometry is to have parallel steering, i.e. $\delta_L = \delta_R$.

The indices L and R will be used in the remainder of this chapter to denote left and right. At high speeds, where wheels are subjected to high side slips, parallel steering can in fact provide improved manoeuvrability and lowered tyre wear compared to Ackermann geometry.

The steering geometry is in general closer to Ackermann than parallel on heavy trucks. This is because of the importance of low speed manoeuvrability and the fact that the average speed is low, compared to cars. Fig. 2.7 provides an example of the steering relation between left and right wheels, taken from a heavy truck.

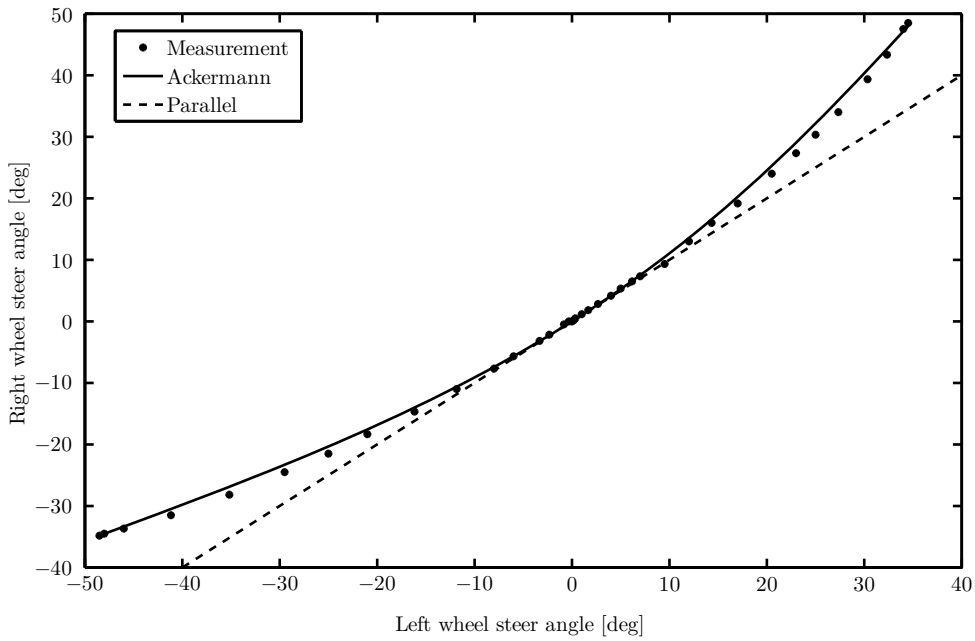

Figure 2.7: The relation between left and right wheel steer angles measured on a specific Volvo truck. It is obvious that the angle corresponds more closely to Ackermann geometry than to a parallel geometry.

2.1.9 Induced Steering Error

The relay linkages within the steering system will move as the suspension of the vehicle travels up and down or rolls. This will induce a wheel steer angle, disconnected from steering wheel movement. The relation between the joint, connecting the drag link and the upper steering arm, and the geometry of the suspension will be the main way of controlling this effect. The coupling to roll motion, known as roll-steer, is in particular high on some heavy trucks. This typically adds understeer as the vehicle rolls in corners. It can also make the vehicle sensitive to vertical one-sided disturbances.

2.1.10 Steering Forces and Moments

Forces and moments acting on the wheels interact with the steering system. This is well described by Gillespie [55]. The most significant terms in this will here be described

together with other torque components acting on the steering system. This provides an overview of all terms that contribute to the final steering wheel torque, as experienced by the driver. Left and right wheel steer angles are assumed to be equal, i.e. small steer angles. Furthermore, caster and king pin inclination angles are assumed to be small and symmetric.

To start with the tyre axis system X_T, Y_T, Z_T is defined as follows. The tyre axis system coincides with the intermediate axis system X, Y, Z, with the exception that X_T and Y_T are rotated around the Z-axis so that X_T coincides with the wheel plane. In the ground plane the wheel is subjected to forces and moments in and around the X_T, Y_T and the Z_T directions. Forces are denoted, in order, as F_{XT}, F_{YT} and F_{ZT}. Moments are denoted, in order, as M_{XT}, M_{YT} and M_{ZT}. The later, M_{ZT}, is known as the aligning moment, which has a large impact on the steering system, as will be shown.

Resulting Moment from Vertical Forces

A vertical force F_{ZT} is acting on both left and right front wheels, denoted by F_{ZTL} and F_{ZTR}. The resulting moment, M_V, acting on the upper steering arm is

$$M_V = -(F_{ZTL} + F_{ZTR}) \cdot r_k \sin\sigma \sin\delta + (F_{ZTR} - F_{ZTL}) \cdot r_k \sin\tau \cos\delta \tag{2.6}$$

Here the first term, which includes kingpin inclination, dominates at low speeds in a heavy truck. When steering both wheels the vehicle is lifted. This causes a returning moment. The second term, including the caster angle, may cause steering pull.

Resulting Moment from Lateral Forces

The lateral forces F_{YTL} and F_{YTR} build up with speed when cornering. Road disturbances can also cause lateral tyre forces. The resulting moment here is

$$M_L = -(F_{YTL} + F_{YTR}) \cdot r_{stat} \tan\tau \tag{2.7}$$

where r_{stat} denotes wheel radius measured from ground to wheel centre.

Resulting Moment from Longitudinal Forces

The tractive forces F_{XTL} and F_{XTR} caused by e.g. front wheel drive, or more likely brake activation, act thorough the steering-axis offset at ground and produce a resulting moment as

$$M_T = (F_{XTR} - F_{XTL}) \cdot r_k \tag{2.8}$$

As r_k is positive on heavy trucks it causes a destabilising steering wheel torque during split friction braking.

Aligning Moment

The resulting lateral force is in general not acting at the centre of the tyre, as assumed in Eq. (2.7), but further backwards. This distance is known as the pneumatic trail. As stated by Pfeffer [61], the pneumatic trail will reduce as tyre road friction drops. This makes it possible to experience a change in friction level even before reaching the actual friction limit. It should however be stressed that this really requires both a skilled driver and a steering system free from high friction and damping. The resulting moment acting on the upper steering arm caused by aligning moment, M_{ZT}, is

$$M_{AT} = -(\underbrace{F_{YTL} \cdot t_L}_{=-M_{ZTL}} + \underbrace{F_{YTR} \cdot t_R}_{=-M_{ZTR}}) \cos \sqrt{\sigma^2 + \tau^2} \tag{2.9}$$

where t_L and t_R denote the pneumatic trail length on the left and right wheel, respectively, positive backwards from wheel centre. For example, the Brush tyre model provides an explanation of why the pneumatic trail depends on the current friction level and also lateral slip angle [62]. The pneumatic trail also depends on wheel pressure [61].

Friction Acting in the Steering System

The steering system contains several joints, sealings and bearings. All these contribute a small amount of friction, i.e. elements slide against each other. Together these contributions sum up to a total amount of friction within the steering system. Friction can suppress disturbances and act as a prop for a driver in long curves, but will also make it more difficult to perceive small force changes between road and wheel. An example of a model for friction is given in [61]. As described, a simple coulomb friction model is not representative. Instead other alternatives are suggested, e.g. a spring coupled in series with coulomb friction.

Friction is also present between the wheels and road surface. This effect often produces the highest contribution of moment at very low speed and can therefore be dimensioning for the entire steering system. It is sometimes argued that a high steering-axis offset at ground would reduce the wheel friction moment. This was shown not to be true by Sharp and Granger [63] when the wheel is free rolling. The relation between offset and wheel friction level is very weak. When the wheel is locked, i.e. brakes are applied, the friction moment increases as offset is introduced.

Damping Acting in the Steering System

Damping, which is a speed dependent torque, acts within the system in several places. Damping stabilises the steering wheel movement. However, too much damping will make the vehicle heavy and slow to steer.

Inertia in the Steering System

Steering system inertia mainly comes from the steering wheel itself. This is because of the ratio acting between the lower and the upper side of the system.

2.2 Rack and Pinion Steering System

Rack and pinion is a mechanism used on most passenger cars. A pinion is connected to a linearly moving rack. It contains fewer joints than the steering gear arrangement. This has the benefit of less compliance and backlash. Heavy truck rack and pinion steering was introduced by Volvo Trucks in 2012 as they launched the individual front suspension, shown in Fig. 2.8. The principle of forces, as presented above, acting on the steering system in Fig. 2.8 still remains however.

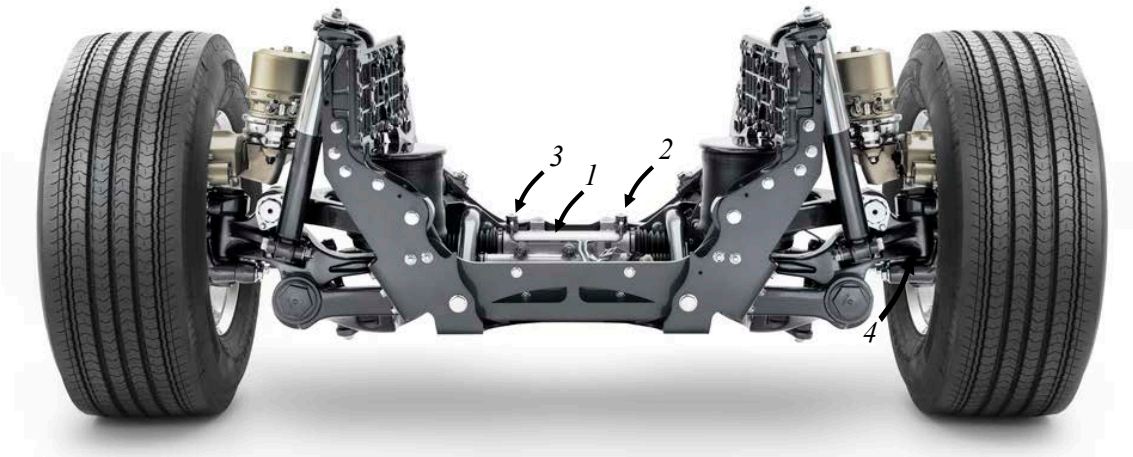

Figure 2.8: Rack and pinion steering is used here on Volvo's individually suspended front axle. It has a linear hydraulic piston (1) acting on the rack to provide power steering. High pressure fluid is pumped into either chamber (2) or chamber (3) to push the rack in either direction. The rack controls the angle of the steering knuckle (4) around the kingpin bolt. The two chambers (1 and 2) are controlled by a valve that is connected to a torsion bar (not included in the picture). The axle installation is of the double-wishbone type.

2.3 Electric Power Steering System

EPS systems consume less energy in general and are easier to control than hydraulic power steering (HPS) systems [64]. This is the reason why EPS has replaced the usage of HPS in most high-end passenger cars. A typical EPS system can respond to a request within a couple of milliseconds. Trucks on the other hand have high power density requirements. This has resulted in hydraulics retaining a prevalent use position. The difficulty in controlling hydraulic power steering in an exact and quick way has however made room for a compromise. A mixture of the two have been introduced by e.g. Volvo Trucks [49]. A sketch of this system is provided in Fig. 2.9. An electrical motor is placed on top of a hydraulic steering gear. Both add torque on top of what the driver does. This is known as torque overlay. Torque overlay is possible to achieve also with other combinations of hydraulic and electronic action. This is demonstrated by Dell'Amico [65] wherein the valves of a hydraulic steering gear are being electronically controlled.

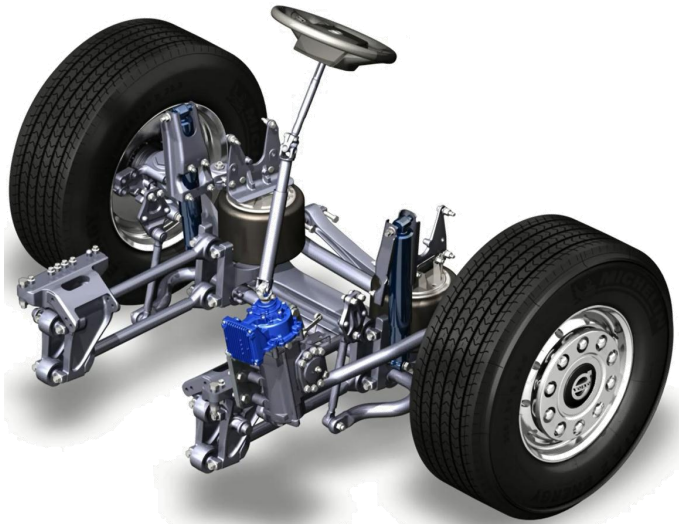

Figure 2.9: A combination of EPS and HPS has been introduced on heavy trucks. This picture shows the system offered by Volvo Trucks. An electric motor (highlighted in blue) is place on top of a conventional hydraulic steering gear.

When introducing electronics into the system it is possible to fundamentally change what is felt in the steering wheel. A pure HPS system can in general only act upon input from the driver. With electronics introduced it is possible to control the system independent of driver inputs. This is called active steering. With active steering it is possible to have progressive power steering amplification, reduce impact from road disturbances [49], support the driver with lane-keeping aid functions, and a lot more. It is not possible however to turn the road wheels independently of the steering wheel.

2.4 Angle Overlay System

Rothhämel [58] presents an installation of a Harmonic Drive gearbox into a heavy truck steering system. This works like a planetary gear and makes it possible to overlay a steer angle on top of the steering wheel angle. Similar systems are used in some high-end cars. The system developed by Rothhämel is controlled to induce artificial understeer and to change the yaw rate gain. Angle overlaid systems provide an opportunity for changing vehicle response and addition of active safety functionality where the driver can be taken out of the loop to a larger extent than is possible with a torque overlaid system. Also angle overlaid system can also be called active when it is controlled independently of driver input. No heavy truck manufacturer has yet introduced an angle overlaid system onto the market. To achieve this fundamental hardware changes to existing vehicle technology would be required. Therefore, angle overlaid systems are considered to be outside the scope of this thesis.

2.5 Steer-by-Wire System

When removing the mechanical linkage between the steering wheel and the wheels it is possible to control vehicle response independent of driver interaction. It is also possible to apply any torque onto the steering wheel, independent of road wheel interaction. This is known as steer-by-wire. Nissan Motor Company recently introduced the first commercially available car with steer-by-wire. It is characterised with a 'quick response, a high disturbance suppression and straight-line capability, as well as a wide range of steering ratio settings' [66]. Very high requirements on redundancy in electronics are needed when the mechanical link has been removed. This creates a costly system, which previously has been the main reason for not having steer-by-wire in production cars or trucks. When using both angle overlay and EPS simultaneously, both angles and forces become decoupled. This is therefore one way of designing a steer-by-wire system. Steer-by-wire systems are considered to be outside the scope of this thesis.

Chapter 3

Truck Brake System

A brake system provides both longitudinal and directional control of the vehicle and thus composes several important motion actuators. This chapter presents an overview of the brake system in a modern heavy truck and also relevant characteristics thereto, as a background to the core of the thesis where several motion actuators are to be synchronized.

3.1 Brake System Overview

UNECE [22] states that all road vehicles should be equipped with: i) a service brake system that makes it possible for the driver to 'halt it safely, speedily and effectively, whatever its speed and load, on any up or down gradient', ii) a secondary brake system that makes it possible for the driver to 'halt the vehicle within a reasonable distance in the event of failure of the service braking system', and iii) a parking brake system 'to hold the vehicle stationary on an up or down gradient even in the absence of the driver'. This chapter will describe how these aspects are solved in a modern high-end heavy truck. First of all the main layout of a brake system will be presented using an example. This is followed by an overview of the contained components and a description of the response that a brake system can produce. A brake system often contains the additional software component ESC, which applies individual wheel brake action for yaw and roll stabilization. This will not be discussed further in this chapter.

A specific heavy truck brake system is shown on a system level in Fig. 3.1. The system is pneumatic and electronically controlled. Pneumatically actuated brake systems have become a standard for heavy trucks [67]. This is due to a number of advantages compared to a hydraulic system, which is common on lighter vehicles. Firstly, spillage is harmless to the environment and to the operator. This makes it easier to design safe connectors between the truck and multiple trailers. Secondly, small leaks will not lead to a failure in brake performance. Electronic control in the brake system makes it possible to reduce brake onset delays, that otherwise can be substantial in long trucks and truck combinations, and to achieve exact brake distribution with respect to normal axle loads and brake wear. This is known as an electronic braking system (EBS). In Fig. 3.1 it can be seen that the driver is operating a foot pedal (5) that is connected to a control unit (47) via CAN (SAE J1939). The control unit (47) in turn is coordinating pressure modulators (46, 58) and pressure control valves (35) that are attached to the axles. The modulation is

executed electronically. The pressure modulators contain advanced valves that can pass air from supply tanks (11F, 11R) to the corresponding brake cylinders (2, 3); to meet a pressure that has been requested by the control unit (47). The front axle has two pressure control valves (35) together with a one channel modulator (58) as an alternative to a two channel modulator (46). The control unit (47) can also request brake action from a trailer via CAN (ISO 11992). When combining all the described components it becomes possible for the driver to brake the vehicle by using the foot pedal. This forms the service brake system.

The foot pedal (5) is also connected to the pressure modulators (46, 58) and to a pneumatic trailer connector (C) via pneumatic pipes (21, 22). This makes it possible to also send commands to the pressure modulators (46, 58) pneumatically. This loop forms the secondary brake system, in the event of an electronic failure in the service brake system. Other types of failures require other backup mechanisms. Pneumatic failures are handled by having two pneumatic circuits, one front and one rear, that are connected to different supply tanks (11F, 11R). If the rear circuit fails the front circuit forms the secondary brake system and possibly vice versa. Moreover, mechanical failures of individual wheel end components are handled by actuation of other wheels.

The state of the park brake lever (26) is read by a control unit (43), which is connected with pneumatic pipes to the park brake inlets of the four spring brake cylinders (2). This forms the parking brake system. These cylinders contain mechanical springs that secure strong engagement of park brake action, even when the pneumatic supply pressure drops. The park brake circuit is also used by some truck manufactures to form parts of the secondary brake system. This is especially relevant for tractor units where the rear axle load is low when running unladen. If a pneumatic failure occurs in the front service brake circuit it will not be enough to brake the rear axle group. This can be resolved by having spring brake cylinders (2) on the front axle that also can be actuated by the park brake circuit.

It should be noted that substantial variability exists in how a brake system is designed for different truck configurations. This is especially true when considering pressure modulators and pressure control valves. These are sometimes shared between several brake cylinders and sometimes used only by one. Using fewer modulators and pressure control valves can reduce the cost of the system, but it also removes the possibility to actuate individual wheels. Separate actuation of many individual wheels is important when using the brake system as a means of steering the truck, and this will subsequently be referred to as differential braking, or when braking on a split friction surface. Trailers often have less possibility for individual wheel brake actuation.

With EBS comes the possibility of applying brake action on individual wheels (or pair of wheels when they are pneumatically connected) also without involving the driver. In Fig. 3.1 this can be accomplished by the control unit (47) that has direct access to all modulators (46, 58) and pressure control valves (35). The system can thus be referred to as a by-wire system, which makes it possible to serve AEBS, ACC, Cooperative ACC and other higher layer functions. The pneumatic brake system is on many trucks also supported by other types of mechanisms, such as: engine brake action, a hydraulic or electrical retarder, or in the case of a hybrid truck one or several electric motors. As the pneumatic system is operated by-wire it is possible to perform seamless synchronization amongst the systems as a driver presses the brake pedal. This is known as brake blending.

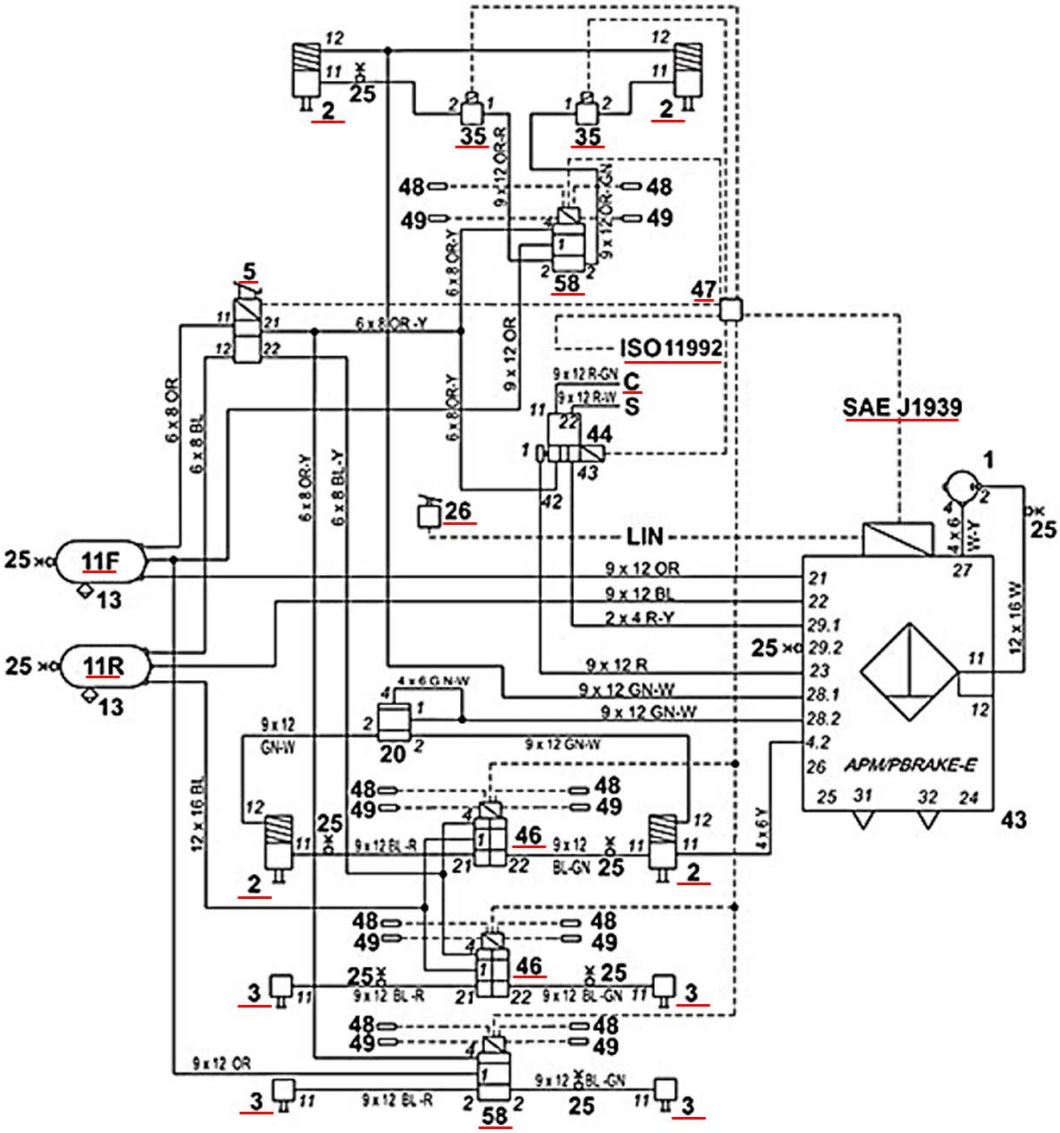

Figure 3.1: Example of brake system architecture from a single front axle Volvo 8×4 truck. Solid lines are pneumatic tubes and dashed lines are electronic wires.

3.2 The Wheel Brake Unit

This section will present how a brake force is produced on a tyre when a pressure acts in a brake cylinder. First the brake cylinders will be described, this is followed by the calliper, pads and the disc. This section ends with a description of how a pressure modulator operates in the light of this background.

Two types of brakes exist, namely disc brakes and drum brakes. Disc brakes are more common on high-end heavy trucks in Europe. Disc brakes are easier to repair and have better heat dissipation properties than drum brakes. Drum brakes are in general cheaper, weigh less than disc brakes, and are more protected against corrosion. This section will not describe drum brakes further.

Fig. 3.2 provides an illustration of a front and rear axle disc brake unit. The brake cylinder converts pneumatic pressure to a piston force that is connected to the brake pads via a lever arm in the brake calliper. Brake cylinders come in two variants, a spring loaded variant (see (2) in Fig. 3.1) and a standard variant (see (3) in Fig. 3.1). The former is designed to support dual operation of park brake and service brake actions. The latter only supports service brake action. Fig. 3.3 illustrates the principle of a spring loaded brake cylinder. The principle of a standard cylinder is more or less identical, but with the upper chamber and park spring removed.

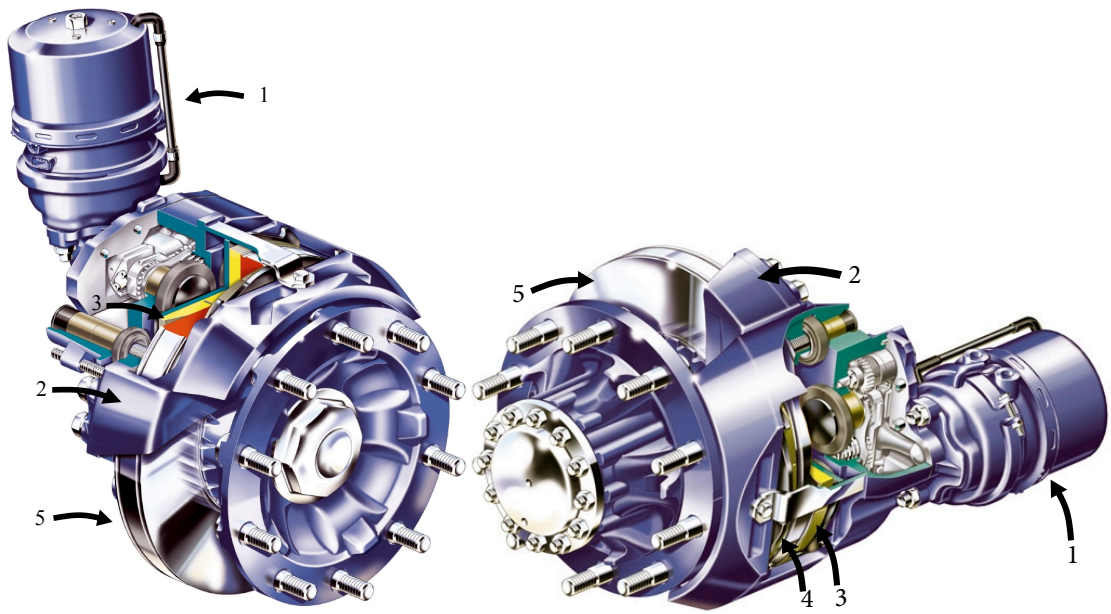

(a) Front axle **(b)** Rear axle

Figure 3.2: Pneumatic disc brake units from a Volvo truck. A brake cylinder (1) is connected to the brake calliper (2), which is holding the inner and outer brake pads (3, 4). Between the brake pads lies the brake disc (5) which is rotating along with the wheel. When the two brake pads (3, 4) are brought closer a frictional force is generated between the pads and the disc.

As described thoroughly by Day [67], the materials that are used in discs and pads are important from three perspectives. Firstly, wear of the discs and pads should be min-

Figure 3.3: A spring brake cylinder. A plate (1) is mounted to the piston/pushrod. The piston is retracted by a return spring (2) and extracted when high pressure air fills up the chamber (3) (collapsed in the picture). The piston also extracts when the park spring (5) overcomes the pneumatic pressure of chamber (4).

imized. Secondly, the coefficient of friction between disc and pad, μ_B, should be sufficiently high to enable a high braking torque. Thirdly, the coefficient of friction should also be insensitive to changes in pad/disc temperature and surface moisture. The coefficient of friction normally ranges from between 0.35 to 0.4 on heavy trucks, but will typically vary by 25% as a function of temperature. This will no longer hold when the temperature becomes extremely high ($\gtrsim$350°C). Overheating can lead to both temporary and permanent fading brake action.

The torque, M_B, that is acting on a rotating wheel while applying service brake action can be calculated, assuming that the coefficient of friction μ_B is known, according to

$$M_B = 2\mu_B(P_B - P_T)A_a\eta r_e \tag{3.1}$$

where P_B is the brake gauge pressure in the brake cylinder, P_T is a threshold pressure mainly owing to the return spring, A_a is the actuation area in the brake cylinder, η is the gain factor of the brake calliper, and r_e is the mean radius of the disc/pad rubbing path. A typical value of η is 10 and a typical value of P_T is 0.3 bar. The latter can be compared to the upper limit of P_B, which is equal to the supply pressure in the brake system (normally around 10 bar).

The rotational speed of the wheel, when ignoring propulsion, can now be modelled as

$$I_W\dot{\omega}_W = -r_{stat}F_{XT} - M_B \tag{3.2}$$

where I_W is the inertia of the wheel and ω_W is the angular velocity of the wheel around the wheel-spin axis. The longitudinal tyre force F_{XT} will be a consequence of the angular velocity of the wheel. This relation can further be modelled using a tyre model, see [62]. Yet, in steady state it holds that $F_{XT} = -M_B/r_{stat}$. Steady state tyre forces are normally reached within approximately 2 m of travel after applying a step in brake torque.

When the applied brake torque, M_B, surpasses the limit of road friction the wheel will lock. This should be avoided as, for instance, the peak lateral tyre force will be strongly

reduced when a wheel locks [67]. In the brake system this is handled by performing ABS control using the pressure modulators and pressure control valves. A starting point in ABS is that most wheels are equipped with a toothed ring and pickup for measuring the angular velocity. By comparing the wheel speeds of different wheels it is possible to determine when a wheel is about to lock. When a wheel lock is detected the corresponding modulator or pressure control valves are acting to reduce the pressure that is being applied in the brake cylinder. Once the angular velocity has picked up again the pressure will be increased. On a truck this results in heavy 1–2 Hz cyclic brake pulses [68]. This furthermore implies that the longitudinal force F_{XT} will also oscillate when ABS is active. Miller and Henderson [69, 68] have demonstrated that with new quicker control valves it is possible to reduce the magnitude of these oscillations and thereby achieve a shorter stopping distance. This would also make it possible to achieve more exact control of both lateral and longitudinal tyre forces, which is important when performing motion control [70].

3.3 Response of Brake System

Fig. 3.4 displays an example of how fast brake pressure can build up in a standard truck brake system. The actual pressure is measured in the brake modulator on the front axle (component 58 on the front axle in Fig. 3.1). Also included is an estimate of the longitudinal slip of the corresponding wheel. It should be noted that additional delay may appear when a command originates from the foot brake module (component 5 in Fig. 3.1) in Fig. 3.4 the command is considered to act in the brake modulator. The measured brake pressure has an approximate time constant of 90 ms. The longitudinal slip on the other hand is first of all associated with a time delay of about 80 ms. It thereafter resembles the dynamics of a first order system with a time constant of about 70 ms. Higher speeds would yield shorter slip settling times. The longitudinal slip furthermore provides a good indication of how fast the longitudinal force that is acting on the tyre develops. The effects of longitudinal relaxation, which is a measure of how fast a force builds up when the slip has changed, can be approximated as a system with a time constant of 50 ms at the given speed (longitudinal relaxation length is $\sim$0.5 m) [62]. A slightly slower step response, than that seen in Fig. 3.4, can be expected when the magnitude of the step is higher; and a quicker response at a lower magnitude. The time delay that is seen in the longitudinal slip curve in Fig. 3.4 can be explained by three factors: i) the threshold pressure P_T must be surpassed before the brake pads start moving, ii) there is damping acting within the cylinder and the calliper, and iii) the mass of the pads and the moving parts of the calliper need to be moved to get contact with the disc. The two last terms should consequently also be added to Eq. (3.1), when seeking a more exact transient model. For more details see [69, 68].

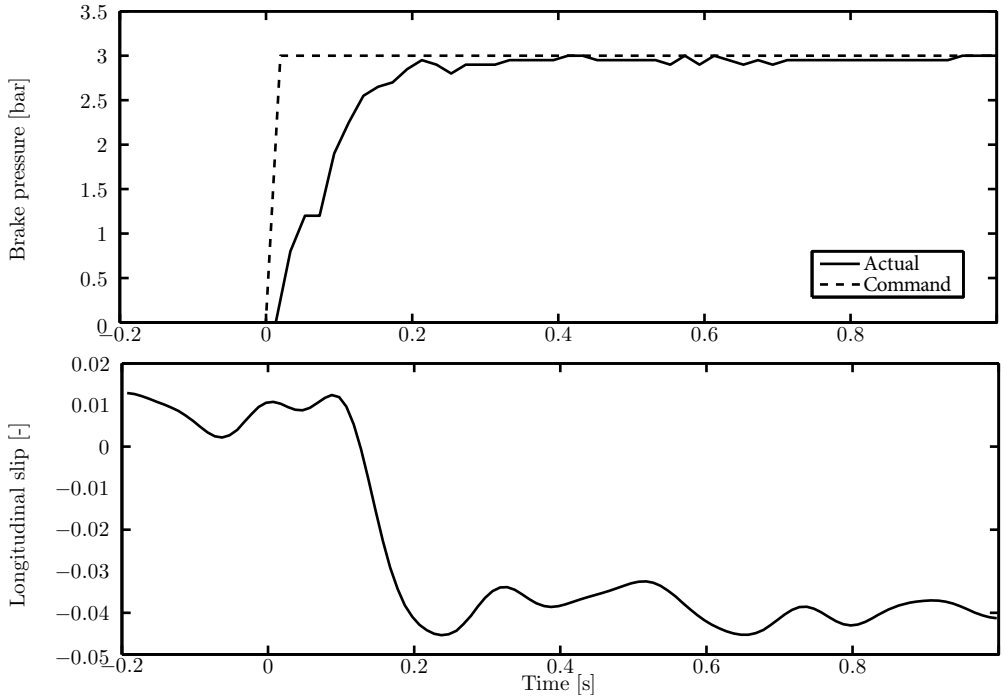

Figure 3.4: Measurement from a heavy truck showing how both the actual pressure in a brake cylinder and the corresponding longitudinal slip responds when commanding a step in brake pressure. The speed of the truck is initially 35 km/h.

Chapter 4

Characterisation of Drivers

This chapter provides an overview of how truck drivers respond to stimuli that are relevant for lateral and longitudinal vehicle motion control. The content is based on Paper I, Paper II, and Paper III.

4.1 Background — Steering Wheel Torque

This section provides an overview of the effects that a steering wheel torque disturbance, sometimes also called guidance, has on a driver. The words disturbance and guidance will be used interchangeably in this chapter. The traditional difference merely depends on the expected outcome. If the expected outcome is assumed to be supportive it is common to use the word guidance. If the expected outcome is assumed to be worsened it is common to use the word disturbance. Yet, the nature of the outcome is clearly dependent on what perspective is being used. Is it the stance one of traffic safety, or possibly that of the driver? Because of this ambiguity the two words will be treated as synonyms in this chapter and neither will be associated with a supportive nor a worsened outcome, but rather a neutral one.

As active steering was introduced on a wide scale in the car industry the expectations of the use of overlaid steering wheel torque for improved safety grew. Numerous studies have been presented on its effect. Surprisingly, many studies show different results on whether added steering wheel torque can change the behaviour of the driver for the better or not. Therefore before looking into individual studies some fundamental observations of human behaviour will first be described.

4.1.1 Human Adaptation to Force Fields

The well-established scientific field of human motor control includes a subfield concerning the task of reaching. Observations from this area have also been proposed to explain aspects of human driving or, more precisely, the task of steering by Benderius and Markkula [71]. The theory suggests that the movement of an arm is executed from a predefined set of plans. These plans can be scaled in dimension and thus produce both small and large movements. Yet the duration of the movement will remain independent of the dimension [72]. For the task of steering a typical duration of the movement is in the order

of 0.4 s [71]. The trajectory of the motion is described as ballistic (with regards to visual feedback), or in other words open-loop. This is concluded for instance from the fact that the underlying plan for movement seems unaffected by an obstacle along the trajectory, appearing first after the movement has started [73].

A force field is, in the context of reaching, an externally imposed force acting on the limb of interest that is dependent on the position of the limb. Steering torque feedback is one example of a force field. Studies on adaptation to unexpected stable force fields have revealed that people can update their models for ballistic execution to eliminate the influence of the force fields and thus perform as in free space within a handful of repetitions [74, 75]. This can for instance serve as an explanation to a driving simulator study run by Deborne *et al.* [76] where the steering torque feedback characteristics of a car were changed immediately before entering a curve. All subjects managed to maintain the vehicle on the road (as they quickly adapted to a change in a force field), but did at the same time experience a high mental work load (supposedly while updating their models).

Even before force adaptation has occurred in the brain there are other mechanisms that can reduce the deviation from the intended trajectory in the presence of an external force. A model of the involved mechanisms can be found in Fig. 7 in Paper II. The stretch reflex is perhaps the most important one. This reflex is a fast neural loop, located in the spinal cord, and can act independently of voluntary action. When a muscle is longer/shorter than expected the alpha motor neuron typically responds within 50 ms to stimulate the muscle fibres involved and thus suppress the disturbance [73]. In the context of steering this means that when introducing steering wheel torque disturbances that ramp up quickly, the most likely outcome is that these will be opposed by the driver; as is also suggested by Benderius [77]. Yet, the stretch reflex strength can be altered by the brain, e.g. by co-contraction of muscles [78]. However, it is not apparent if this in practise makes it possible to change the behaviour of the driver. Even so, it is clear that the time scale in which the steering wheel torque disturbance is introduced will play a crucial role in determining what parts of the neural system will come into action. As a reference, the stretch reflex typically responds within 30–50 ms [77]; the brain can affect muscle activity no quicker than within 150 ms [77]; if the stimuli is visual it will take at least 180 ms before muscles activate [79].

4.1.2 Quick Actions and Slow Actions

As was stressed in the previous section the chances of changing the behaviour of a driver by applying superimposed steering wheel torque is highly dependent on the rate at which the torque is added and also on what time scale the change is expected. This section will cover selected prior art, where driver behaviour has been analysed in the presence of superimposed steering wheel torque, on the basis of said rate and time scale.

Starting with studies characterised by systems running with a high rate of change and on a short time scale; this is often referred to as emergency avoidance assist. Benderius [77] describes four car studies wherein superimposed steering wheel torque was evaluated in near-crash scenarios: i) a driving simulator study on the topic of oncoming collision avoidance involving 41 subjects, ii) a real vehicle study on the topic of run-off-road avoidance involving 56 subjects, iii) one driving simulator study on the topic of run-off-road avoidance involving 41 subjects, and iv) one driving simulator study, run on a straight

road without apparent threats, which involved twelve-year old children and adults. In all studies the drivers were distracted by a secondary task and were initially not looking at the road. The outcome was similar in all studies; drivers counteracted the steering wheel intervention, even children did. The results are explained by suggesting that 'drivers are neurologically hard-wired in their response to unexpected steering wheel disturbances'. These findings are further confirmed by Hesse *et al.* [80] where a number of real vehicle and driving simulator experiments are presented. It has been observed that in near-crash scenarios drivers tend to counteract low-level torque overlays. An attempt to increase the level of overlay was therefore performed, which instead resulted in loss of control for a few subjects. The latter is commented by Benderius [77] who suggests that this could be a consequence of the fact that human muscles become less precise when being subjected to high loads. Keller *et al.* [81] also presented a similar study with a high level of steering wheel torque feedback and showed a reduction in collision rate, but never commented about the later risk of loss of control. On the topic of loss of control Switkes *et al.* [82] performed a study where the severity of accidentally applied steering wheel torque was analysed, i.e. torque failure. Both failures behaving as torque steps and as slow torque ramps (4 N m/s) were included. Steps started to be experienced as critical when the amplitude was above 4 N m. Ramps were never experienced as critical, irrespective of the final amplitude.

Katzourakis *et al.* [83] have presented a study on road departure prevention using a low level of torque overlay, along with other alternative control outputs. The effect observed on steering wheel angle movement was limited, and thus the gain. In this study drivers were not distracted and were furthermore aware of what manoeuvre to perform and when. Iwano *et al.* [84] further investigated the important trade-off between low and high level of feedback in a driving simulator study. A medium level of feedback was found to yield the best outcome. However, only six subjects took part, which is low when considering human variability, see e.g. [80].

Brandt *et al.* [85] have, in contrast to previously mentioned studies, reported that the number of collisions can be reduced by instead using a combination of continuous torque based lane-keeping-aid and torque based crash avoidance support. An experiment was run in a fixed based simulator, where drivers were distracted by a secondary task. It was shown that suddenly appearing obstacles were successfully avoided more often with assistance than without. This could be explained by the fact that drivers started trusting the system during normal driving and when distracted managed to inhibit counteracting arm reflexes.

Moving over to studies characterised by a relatively slow rate of change and a long time scale for operation, one first interesting study here was one performed by Crespo and Reinkensmeyer [86]. In a fixed based driving simulator study, involving 24 subjects, they showed that torque guidance can be used to speed up the rate at which subjects learn to follow a visual path. Yet there was no difference in performance after many repetitions between those being supported and those not being supported. In a study run by Mulder *et al.* [87] the effects of an LKA system on curve negotiation were analysed in a fixed base driving simulator study involving 12 subjects. Only a subtle level of torque was added. Results indicate that path tracking is largely unaffected, whereas steering motion appears to become smoother and driver steering forces higher when assisted. In a similar follow up study, involving 24 subjects, the lane-keeping performance was in contrast observed to improve [88]. In this new experiment cones were used to define the borders of the lane.

In total about 3000 cones were hit when no steering support was provided. When driving with LKA turned on this was nearly halved[1].

Johansson *et al.* [89] performed a truck driving simulator study wherein, amongst other objectives, LKA was evaluated. The LKA function activated once the truck had passed a lane marking by more than 50 cm and consisted of a combination of guiding steering torque and steering vibrations. In total 44 subjects took part. Results indicate that drivers supported by LKA spent less time outside lane markings. Another truck study was that performed by Rothhämel *et al.* [90]. They developed a function that altered the steering feel of a heavy truck to indicate the risk of rollover. The function was tested in two versions, one where the steering torque profile drastically increased above a certain lateral acceleration limit ('lane-keeping strategy') and one where it instead drastically decreased above a certain lateral acceleration limit ('ice-patch strategy'). The function was tested in a study on a test track with 33 subjects. Drivers who had the function on, with the 'ice-patch strategy', kept a larger safety margin for rollover by choosing a slightly lower curve entry speed. Weather conditions made it impossible to investigate what effects the 'lane-keeping strategy' had on drivers. One further truck study was performed by Montiglio *et al.* [91]. They installed an EPS system into an IVECO Stralis 480AS and implemented an LKA function. The system was only subjectively evaluated.

In summary, it appears to be possible to alter the steering behaviour of a driver using overlaid steering wheel torque, when a steering function acts continuously and is predictable or possibly ramps up very slowly. In contrast, it is not possible to abruptly change the motion of the vehicle using discontinuous steering wheel torque action with bound magnitude in unpredictable situations. The only exception to this has been found by Brandt *et al.* [85] where continuous action was used to make drivers trust the system. This makes it easier to get compliance also in quick manoeuvres when drivers are distracted. The overall conclusion is that all forms of steering wheel torque guidance must be compatible with the driver's voluntary brain objectives in order to have an effect on the motion of the vehicle; unless the torque is strong when compared to the muscles of the driver. In the latter case several studies show that driver performance can then deteriorate, which could cause vehicle instability.

All studies mentioned earlier in this section have been performed using cars, apart from [89, 90, 91]. Heavy trucks have in general bigger steering wheels, are driven by professionals, have a slightly more upright seat, exhibit slower dynamics, are wider, have higher steering gear ratios, and are often towing trailers. The number of studies that have been commissioned where driver behaviour has been analysed in heavy trucks when introducing overlaid steering wheel torque is strongly limited. It is therefore of high importance to analyse how studies performed for cars link to truck driving. This will therefore be analysed in the following section.

[1]Melman *et al.* [88] furthermore also demonstrated that there is a risk that drivers increase their speed when supported by LKA. This was however demonstrated to diminish when the system was designed to discourage this behaviour.

4.2 Translation of Steering Wheel Torque Between Different Vehicles

The torque that is acting on the steering wheel is composed of all components previously described in chapter 2 and possibly other superimposed safety and comfort functions. The importance of steering wheel torque has been analysed in several studies [92, 93, 61]. Different drivers often have different opinions about their preferred level of feedback when considering subjective ratings [94, 95]. All in all, steering wheel torque feedback is a complex subject that requires both a subjective and an objective stance. These two perspectives will therefore be adapted in this section, where a bridge is sought between car steering torque feedback and truck steering torque feedback. As there are several factors that differ between cars and trucks the most important ones will be discussed one by one. An earlier edition of this section was originally published in Lic thesis [2].

4.2.1 Steering Wheel Size

Newberry *et al.* [96] conclude that a driver perceives force rather than torque. This was based on a test where the angular degree of freedom was locked on the steering wheel, known as an isometric test. When the angular degree of freedom was unlocked and torque set to zero it was further found that a driver perceives steering wheel angle rather than hand translation. In Paper I a complementary study describes how force feedback should vary with steering wheel size in a real vehicle where isometric motion no longer holds and where the driver subjectively decides on an optimal balance between handling and comfort. Also analysed is how a steering wheel torque pulse should scale as the steering wheel size changes.

Subjective Tuning of Base Characteristics

A method was developed to scale the total steering wheel torque in a truck; see Fig. 4.1 for a visual illustration. A single scaling parameter k_g was used to scale all torque components contributing to the steering characteristics according to

$$M_H(\delta_H, \dot{\delta}_H, v_X) = k_g \cdot M_{H,0}(\delta_H, \dot{\delta}_H, v_X) \tag{4.1}$$

where $\dot{\delta}_H$ denotes steering wheel angular rate and $M_{H,0}$ baseline steering torque characteristics (solid lines in Fig. 4.1).

A study was run where 17 subjects decided on their preferred value of k_g. Each subject drove with three differently sized steering wheels. The steering wheels are denoted as $large$, $medium$ and $small$ and have a radius, r_{StW}, of 0.225 m, 0.195 m and 0.165 m respectively. The study took place on a handling track and subjects were told to stay between 45 km/h and 90 km/h.

The reported preferred level of k_g is shown in Fig. 4.2. The variance in trend between subjects is large. This is also expected from existing knowledge on the ability of humans to differentiate steering stiffness [97]. Yet it is clear that torque feedback should be scaled when the steering wheel size changes. A starting point would be to use a rule of thumb that stipulates linear scaling of total torque in order to accomplish a maintained driver

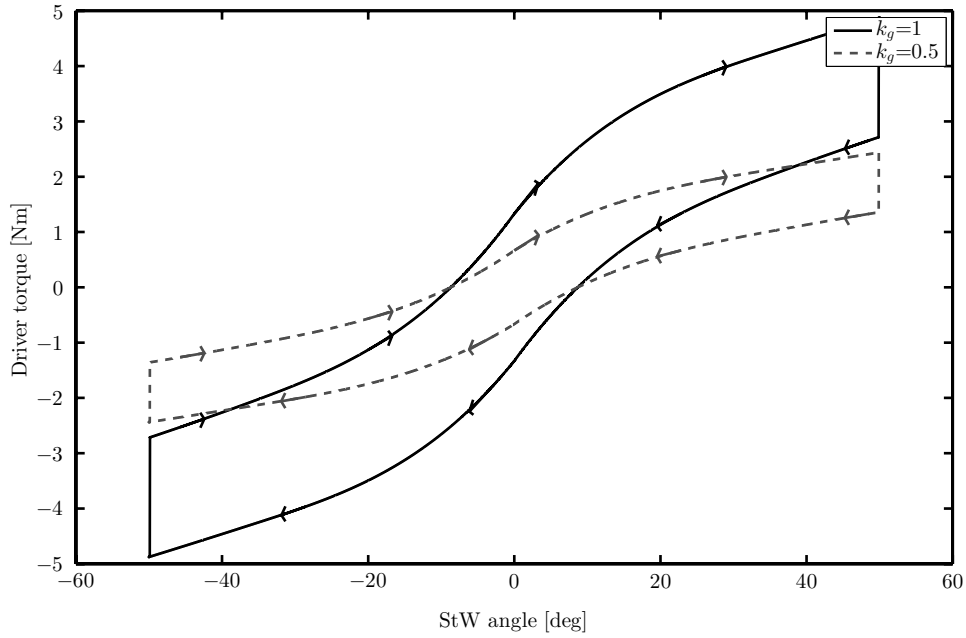

Figure 4.1: A method was developed making it possible to scale the complete steering wheel torque as experienced by the driver, using only one single parameter k_g. The characteristics shown is measured at 80 km/h for the truck used in the experiment. Picture taken from Paper I.

force. During the trials it was however noted that further fine tuning might be needed; e.g. of damping and friction to realise conservation of steering wheel free response return rate. On average, when going from the $large$ steering wheel to the $medium$ one a scaling factor of 0.84 was reported. This can be compared to 0.87, which is the ratio between the radius of the two. When going from the $large$ steering wheel to the $small$ one a scaling factor of 0.64 was reported. This can be compared to 0.73, which is the ratio between the radius of the two.

Objective Evaluation of Pulse Scaling

All 17 subjects also took part in an objective test. They were told to continue driving around the track with two hands on the steering wheel. Every now and then an operator fired off a steering wheel torque pulse. The pulses were 1 s in duration and the amplitude was set to $-3 \cdot k_g$ N m. The parameter k_g was set in random order to 1.0, 0.85 or 0.7. These levels roughly correspond to the steering wheel radius of the steering wheels used in relation to the *large* steering wheel radius. Eq. (4.1) still applied, i.e. both the continuous characteristics and the pulse were scaled with k_g. This procedure was repeated for all three steering wheels.

In total 858 pulses were recorded above 50 km/h, and where no obvious steering motion was observed at the start of the pulse. The relative changes in steering wheel angle observed for the different steering wheels were then analysed. It was found that the steering wheel angle change was very similar for all three steering wheels when the equal force approach was applied. It is therefore suggested to use the same rule of thumb as in

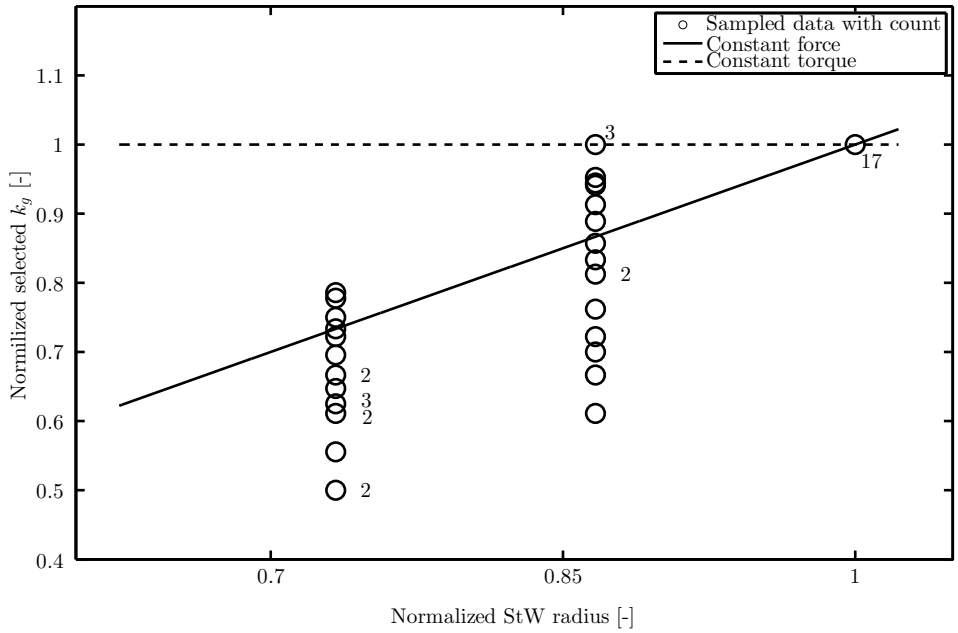

Figure 4.2: Selected values of k_g after subjective tuning of truck base characteristics. The vertical axis is showing an absolute value of k_g divided by the received k_g value for the *large* steering wheel per subject. The horizontal axis is showing the steering wheel radius, r_{StW}, divided by r_{StW} of the *large* steering wheel. Numbers are used to denote multiple occurrence of data-points. Also included are two lines corresponding to constant force and constant torque conservation, respectively. Picture taken from Paper I.

the subjective section, i.e. linear scaling of total torque to accomplish maintained driver force level when steering wheel size is changed.

Common Discussion from Subjective and Objective Part

When transferring steering functions and mapping results as the steering wheel size is changed, the common conclusion is that the steering wheel force should be conserved as a starting point. This will ensure that both the subjective experience and the objective response will largely be conserved. For the objective part it is important to note that the force that is applied to the hands of a driver not only originates from the added torque pulse itself. All other force components, as described in chapter 2, will also have to be accounted for when mapping steering functions.

4.2.2 Steering Ratio, Wheelbase & Understeer Gradient

Neukum *et al.* [98] performed a thorough evaluation of a failure in an angle overlay steering system. They completed a study on a test track using four cars. In total 98 subjects were involved. A steering failure was emulated by applying an overlaid steering angle step of varying amplitude. This caused a yaw disturbance, but also a steering wheel torque disturbance that was vehicle dependant. Results were used to find predictors for subjective rating of the severity. The best predictors found were the induced lateral acceleration and yaw rate[2], whereas steering wheel torque disturbance amplitude did not turn out to be a good indicator. These findings are also supported by Sweatman and Joubert [99]. They found that yaw rate gain is the primary cue used by drivers when comparing the response between two vehicles. On the other hand Rothhämel [58] identified nine important dimensions for subjective rating of a vehicle. It is therefore not practically possible to completely conserve a subjective rating of a function when transferred between vehicles. However, similarly to steering wheel size, some general rules can be developed. Starting from the findings in [98, 99] it can be assumed that conservation of lateral acceleration is consistent with subjective conservation. Objective and subjective conservation are thereby equal.

Lateral acceleration gain can be calculated in the linear region with Eq. (2.3). It can be seen that a change in overall steering ratio, i_s, will leave the lateral acceleration a_Y conserved if δ_h/i_s is constant, i.e. leaving road wheel steer angle unaffected. When changing wheelbase the following relation must hold to conserve lateral acceleration

$$\frac{\Delta\delta_H}{\delta_H} = \frac{\Delta l_{eq}}{l_{eq} + K_u v_X^2/g} \tag{4.2}$$

where $\Delta\delta_H$ is the required change in steering wheel angle to account for a change in equivalent wheelbase, denoted Δl_{eq}. As can be seen, the adaptation is speed dependent.

A change in the understeer gradient, denoted ΔK_u, can be accounted for in a similar manner as wheelbase. This results in a required change in steering wheel angle according to

$$\frac{\Delta\delta_H}{\delta_H} = \frac{\Delta K_u v_X^2}{l_{eq} g + K_u v_X^2} \tag{4.3}$$

[2]Yaw rate and lateral acceleration are closely coupled for steady state cornering in the linear region. Conservation of these two is therefore treated as exchangeable.

From this it can be seen that a change in overall steering ratio, wheelbase or understeer gradient requires a change in steering wheel angle. This is to be realised using a change in overlaid steering torque. When applying torque onto the steering wheel the driver responds with hand force. This process, as previously described, is coupled to a large variance. When no hands are placed on the steering wheel the required change in steering wheel torque can be calculated from steering characteristics, see e.g. solid line in Fig. 4.1. When a driver is part of the loop, driver admittance should also be included, see e.g. [100].

4.2.3 Conclusion

When comparing torque overlay results or when mapping a torque overlay function it is important to consider fundamental physical properties of the vehicle. For steering wheel size this means that driver steering forces should be conserved. It is here important to recall that all force components acting in the steering system should be considered.

Other physical properties of high importance are steering gear ratio, wheelbase and understeer gradient. When these are changed a conservation of lateral acceleration response should be pursued.

4.3 Background — Vehicle Yaw Disturbance

As stated in section 1.1.4 it is often the case that a steering wheel torque disturbance acts at the same time as a yaw disturbance. This can be exemplified by a blow out of a truck front tyre, where both the vehicle itself and the steering system is acted upon by abnormal forces. These effects can result in run off road, collision with oncoming vehicles, rollover or jack-knife, unless the driver is able to balance the effects by steering or braking. Another similar example is that of split friction braking. Here the vehicle typically also decelerates. In other possible applications a yaw disturbance may in contrast be introduced with the purpose to alter the behaviour of the vehicle to gain stability or to avoid a crash. An example would be a lane departure avoidance system wherein differential brake action is applied. Differential brake action can cause the vehicle to change its course independent of driver steer action. It can potentially also be combined with steering wheel torque guidance to exhort the driver in the right direction. This example also demonstrates a combination of vehicle yaw disturbance, deceleration and steering wheel torque disturbance. Another obvious example is that of ESC, which can apply individual brake action to gain lateral stability. Brake based ESC can be extended to also include steering wheel torque guidance [101, 102]. This section provides an overview of prior art, where driver behaviour has been analysed in the context of a combination of a vehicle yaw disturbance, vehicle braking and steering wheel torque disturbance.

As described in section 4.2.2 Neukum *et al.* [98] performed an evaluation of the consequences that a failure in an angle overlay steering system can have. Apart from identifying lateral acceleration and yaw rate levels as good predictors for how severely a driver will perceive the failure they furthermore also derived a limit above which a failure can be considered as dangerous. The identified limit, expressed as a maximum lateral acceleration error, was 1.25 m/s^2 (speed independent) or, expressed as maximum yaw rate error,

4 °/s at 50 km/h, 3 °/s at 100 km/h, and 2.5 °/s at 150 km/h. It should be noted that a steering angle failure leads to a yaw disturbance, but not a decelerating vehicle. In another test track study, commissioned by Tagesson *et al.* [3] and involving 12 subjects, the combination of AEBS and split friction was evaluated in a heavy truck. Based on the observed lateral deviation it was concluded that the combination potentially could lead to complications and that further support might be needed. The level of steering wheel torque disturbance was never varied. Almost the same dimensions were excited in a driving simulator study by Pettersson *et al.* [103], where driver response was analysed during front tyre blow out. The induced deceleration was lower than that achieved in [3]. It was however not zero. In the study they concluded that the effect of surprise was the largest contributing factor to a large course deviation. This was also confirmed by Tagesson *et al.* [3].

Several studies have analysed the benefit of ESC for passenger cars [25]. For trucks the only known study is that of Markkula *et al.* [27]. They investigated yaw stability under low friction conditions in a driving simulator, including 24 subjects. ESC was found to reduce the risk of skidding and loss of control in an avoidance manoeuvre at high speed on low friction. In a follow up study [104] the same authors investigated the data from [27] one step further by fitting a number of models to represent driver steering behaviour. In this light, no differences in driver steering response were found when ESC was active or not active, respectively. The two studies mentioned [27, 104] did not analyse the importance of the steering wheel torque.

In summary, yaw disturbances can act both as unwanted side effects of the vehicle's design and as wanted effects when trying to support the driver in critical situations. A yaw disturbance is often coupled to vehicle deceleration. Moreover, a yaw disturbance is also often coupled to an overlaid steering wheel torque. There are only a few studies that have investigated driver behaviour in this context, apart from work relating to ESC. Moreover, very few of these studies have targeted truck driving. Trucks differ slightly from cars in that they to a greater extent naturally cause steering wheel torque disturbances as a consequence of unsymmetrical brake action. This is because of the steering-axis offset at ground, as defined in section 2.1.1, which is often high on trucks. The implications that this has when braking on a split friction road has previously not been analysed, including the aspect of driver behaviour. As AEBS has been introduced on trucks there is furthermore also the possibility that split friction braking is not initiated by the driver, but by the AEBS function. Clearly there is a risk that the driver is less prepared for this type of disturbance, compared to that of normal split friction braking. This scenario is in many aspects also similar to a front tyre blow out. These two use cases will therefore be analysed in the following section. Additionally, the implications of an induced yaw torque on a truck will also be analysed and compared to previous studies where cars have been used.

4.4 Additional Experiments — Vehicle Yaw Disturbance

Two experiments were conducted on a test track with a group of volunteers. The main purpose was to analyse the implications of the steering-axis offset at ground. The vehicle used was a 9 ton solo tractor unit. In the first experiment, presented in Paper II, the

combination of AEBS and split friction was emulated by unexpectedly applying uneven brake action. In the second experiment, presented in Paper III, a front tyre blow out was emulated by locking the front left wheel. In common for the two experiments was that the vehicle was exposed to a large yaw disturbance, the vehicle was decelerating, and that the level of steering wheel torque disturbance was varied. Furthermore the experiments also created an opportunity to model the behaviour of the drivers with the purpose of gaining more insight about what human mechanisms were in action. This section will present the findings from the two experiments and provide a common discussion.

4.4.1 Automatic Braking Activated on Split Friction

In this scenario 24 drivers were exposed to several repetitions of sudden automatic split friction braking. In the first event half of the subjects were exposed to a destabilising steering wheel torque, arising from uneven braking forces (r_k =12 cm, where r_k was introduced in section 2.1.1). For the other half of the subjects the steering torque disturbance was removed by the EPS system (corresponding to r_k =0 cm); for more details on how this was achieved see Paper II. Subjects were not aware of the true purpose of the study in order to preserve the effect of surprise. Moreover, subjects were told that the intention of the study was to record normal positioning in lane and that they should run back and forth inside a 300 m straight lane. Cruise control was set to 50 km/h. After running back and forth for 5 minutes, without any intervention, an operator fired off the automatic braking. Instead of running the experiment on a real split friction area, which would have disclosed the purpose and jeopardized safety, brakes were instead configured to emulate split friction conditions. The induced yaw disturbance was comparable to that of real split friction braking. After the first unexpected intervention two repeated runs were made at the same speed. The experiment was thereafter repeated for all subjects, after first changing the state of the EPS system (changing to r_k =12 cm or r_k =0 cm). In this way data was collected for all subjects, both with a steering wheel disturbance and without. As no other vehicle was nearby, cones were put in the adjacent lanes to create a sense of danger. Fig. 4.3 provides an illustration of the set-up. Brakes were controlled to target a deceleration of 3.5 m/s^2, which was derived from AEBS requirements [28]. Moreover, a fixed ratio of four to one was used to distribute the brake action between the left and right side. This ratio was selected to be representative for real split friction conditions.

Results

All 24 trajectories relating to the very first exposure per subject, denoted as unexpected, are shown as thin lines in Fig. 4.4a. The longitudinal and lateral displacements of the centre of gravity, x_E and y_E, are defined in a ground-fixed coordinate system. Red and black lines correspond to runs without and with steering wheel torque disturbance, respectively. Thick lines are also included that represent the average lateral deviation. Fig. 4.4b analogously shows all repeated runs at 50 km/h. The average deviation from the intended course is more than double that of the repeated runs. This confirms the findings in Pettersson *et al.* [103], where surprise was identified as a very important factor in a front tyre blow out experiment. Next, the unexpected runs show no significant correlation between

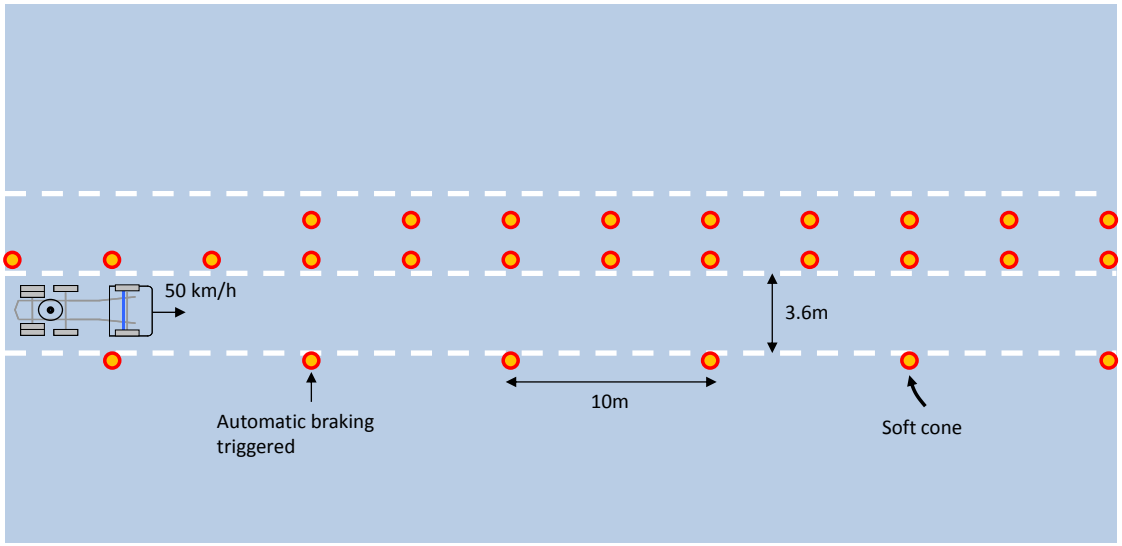

Figure 4.3: A sketch of the scenario used in the AEBS experiment. Picture taken from Paper II.

lateral deviation and the presences of a steering wheel torque disturbance. This also holds for the repeated runs where a paired t-test reveals an insignificant increase in maximum lateral deviation of 2.4±7.7 cm (95% confidence interval) when having a steering wheel disturbance. This is clearly a small factor when considering that some subjects deviate by more than 0.5 m.

The corresponding time series of all runs are shown in Fig. 4.5. Looking at the speed curves it can be seen that in a few runs subjects deactivated the intervention by either pressing the accelerator pedal or the brake pedal. These runs have been removed in the statistical analysis. The steering wheel angle reveals that some drivers responded with smooth and steady movements, whereas others oscillated widely. Moreover, the underlying reason for the lowered lateral deviation in the repeated runs has been identified to occur due to shorter reaction times. This can also be seen in the steering wheel angle plots when comparing how fast subjects initiate their steering movement.

The positive steering-axis offset at ground, which acts destabilizing, see Eq. (2.8), can be observed in the steering wheel torque plots in Fig. 4.5; by comparing the red and the black lines. Around 2.5 N m of the disturbance reached the driver. As seen in the last subfigure, yaw rate is in general shaped as a one period sine wave. The corresponding frequency, 0.5 Hz, happens to match the resonance frequency of several truck combination types [21]. This means that the lateral deviation of trailer units would be even higher than the results observed here, given that the response of the driver would remain.

In order to understand the underlying mechanisms of the observed results further, a driver-vehicle model was developed. The model was closely based on earlier work presented by Cole [105] and Cole *et al.* [106]. The model supports the experimental results in that a destabilising steering wheel torque only has a small effect on the movement of the steering wheel, as well as on the motion of the vehicle. The underlying reason is that the disturbance ramps up slowly compared to the cognitive delay amongst subjects; the magnitude is also low and the disturbance is initially suppressed by passive driver properties, such as the inertia of arms.

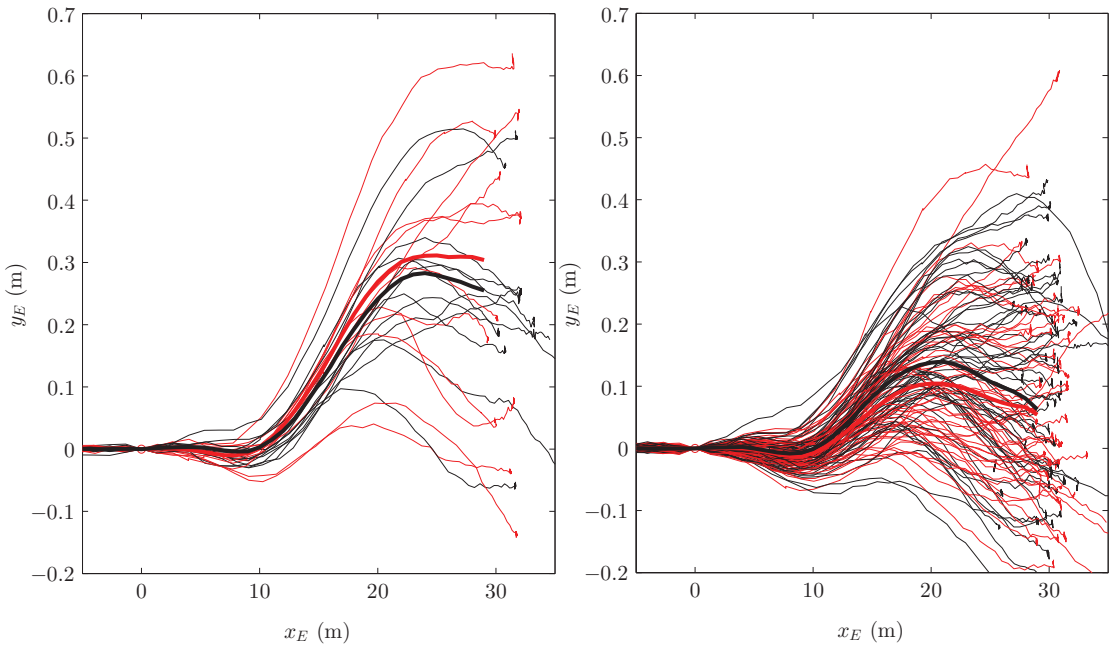

(a) Unexpected runs.

(b) Repeated runs.

Figure 4.4: Measured trajectories of the truck's centre of gravity, at initial speed 50 km/h. Red and black thin lines correspond to individual runs without and with steering wheel disturbance, respectively. Red and black thick lines are the corresponding averages of valid runs without and with disturbance, respectively. The curves have been rotated and moved so that the event starts at position (0.0) m running at zero heading. Picture taken from Paper II.

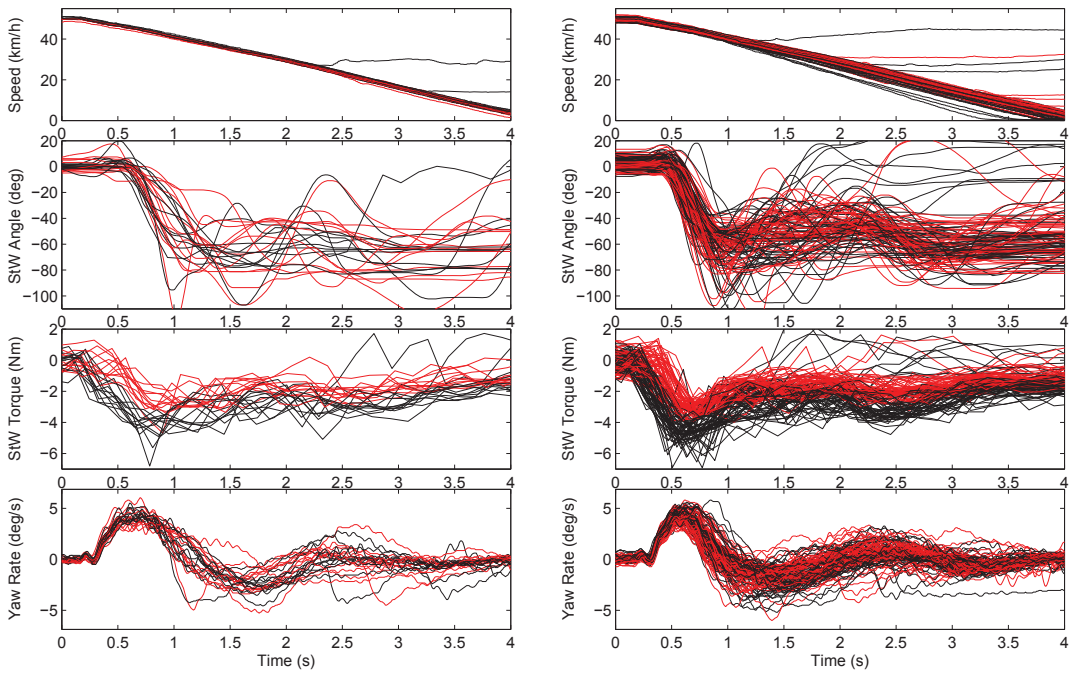

(a) Unexpected runs. **(b)** Repeated runs.

Figure 4.5: Measured time series at initial speed 50 km/h. Red lines correspond to individual runs without steering wheel disturbance. Black thin lines correspond to individual runs with steering wheel disturbance active. StW means steering wheel. Picture taken from Paper II.

4.4.2 Tyre Blow-out & Steering Wheel Forces

The positive steering-axis offset at ground, which acts destabilizing, is as stated also of importance as a front tyre blow out occurs. A deflated tyre has a smaller radius than a normal tyre. The resulting steering-axis offset at ground will then increase and likely underpin a torque on the steering system, see Eq. (2.8), [107]. In [103] a truck simulator study was run where it was concluded that the effect of surprise is the main factor to consider, in order to be able to get as high lateral deviation as observed in real accidents. This was not targeted in this experiment. Instead the role of steering-axis offset at ground was analysed.

Drivers taking part were not aware of the intention of the study, but had earlier been exposed to the automatic braking scenario. After this several repetitions of emulated tyre blow out were carried out. Cones were again used and put in adjacent lanes to create a sense of danger and a reason to maintain the intended lane. In total 20 subjects completed the experiment.

The steering wheel disturbance was altered in the same way as described in section 4.4.1; except for that the difference in brake force was higher, which led to a higher disturbance (around 3 N m). Each driver was exposed to three blow outs, both with and without the steering torque disturbance being present. The front left brake was applied at 350 kPa. This level was selected immediately before the tyre started locking. The produced tyre force was thereby nearly maximised, but discontinuities relating to ABS control were eliminated. The relatively high level was selected to produce worst case blow out forces, which is still not far above what has been observed during real blow outs, see e.g. [108].

Results

All results from the tyre blow out runs are shown in Fig. 4.6. The left figure, Fig. 4.6a, contains all trajectories. The produced average lateral deviation from the original direction was 23 cm when a steering wheel disturbance was present. This can be compared to 16 cm on average when no disturbance was present. There is however large variance in data, so a direct comparison will not prove a significant difference. Instead the relative improvement per subject was tested with a paired t-test. This showed that the average reduction of lateral deviation due to removing the disturbance was lowered by 6.4 ± 4.4 cm, using a 95% confidence interval. This has been calculated after 24 m of longitudinal displacement, where the maximum deviation occurred on average.

Fig. 4.6b contains the corresponding time series. The speed profiles are, as expected, similar for all runs apart for some where the driver has pressed the brake pedal gently. The following subfigure shows the steering wheel angle used. Here early overshoots indicate that some drivers have been affected by the applied destabilising steering wheel torque. Again a paired t-test was run, showing a significant difference in the same interval between 0.3 s and 0.5 s. The steering wheel torque curves, in Fig. 4.6b, show an apparent difference between the two settings used. From the last subfigure it can be seen that the yaw rate response again roughly shows a one period sine wave. The corresponding frequency, 0.7 Hz, also happens to match the resonance frequency of several combination vehicle types [21].

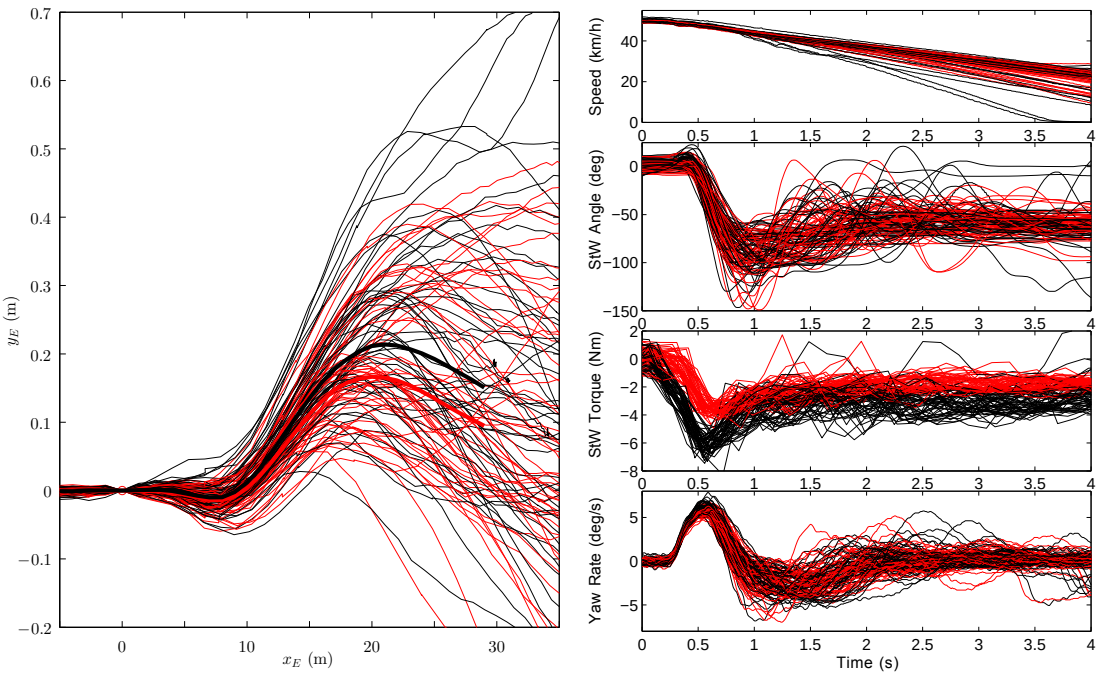

(a) Trajectories. **(b)** Time series.

Figure 4.6: Tyre blow out runs represented by the position of the truck's centre of gravity and other times series. Red and black thin lines correspond to individual runs without and with steering wheel disturbance, respectively. Red and black thick lines are the corresponding averages of valid runs without and with disturbance, respectively. The curves have been rotated and moved so that the event starts at position (0.0) m running at zero heading.

4.4.3 Discussion - AEBS & Tyre Blow Out Experiments

As already stressed by Tagesson *et al.* [3], the lateral deviation observed during the automatic braking study was a lot higher in the initial runs, when drivers were completely unaware of what was going to happen, compared to that of the repeated runs. This is all due to shorter reaction times. In the simulation model set up this was represented by shortening the cognitive time delay from 0.2 s to 0.1 s. Also the weight on lateral path error was increased by a factor of 10. This indicates that in the experiment it is possible that the drivers were able to learn the steering control action necessary and respond in an open-loop manner (not guided by visual or vestibular stimuli), rather than closed-loop (guided by visual or vestibular stimuli). The reaction times observed in the blow out experiments were about the same as in the repeated section of the AEBS experiment. Hence, there is a risk that the same behaviour also occurred here. This might furthermore also have led to co-contraction of muscles and thus a somewhat lower compliance to the steering wheel torque disturbance. However when looking at individual runs from the AEBS section with unaware drivers there is only one subject who seems to move with the disturbance a lot more than all others (Fig. 4.5a black line that reaches a steering wheel angle of 20° at 0.5 s.) Even such large movements will not have a dominating effect on the motion of the vehicle; more precisely about 20 cm of extra lateral deviation. If first combining the observation that the disturbance acting in both experiments ramped up slowly (around 5 respectively 6 N m/s) and the findings of Switkes *et al.* [82], suggesting that slow ramps are never experienced as critical, then it can be concluded that the steering offset at ground has limited effects on the motion of the vehicle when driven by an alert driver in these two scenarios. This has also been shown in the blow out trials (difference in deviation 6.4±4.4 cm) and the repeated AEBS trials (difference in deviation 2.4±7.7 cm). This is of course not valid in the case of a very loose grip or when no hands are on the steering wheel; where instead a substantial destabilising steering wheel angle can be expected. Here disturbance suppression as e.g. provided by the system Volvo Dynamic Steering [49] would prove useful.

The lateral deviation observed in the initial AEBS runs, which must have been dominated by the induced yaw moment, was in some runs higher than the typical lane clearance of trucks. Both a front tyre blow out and an unfortunate combination of AEBS and split friction could thus lead to an accident. The criticality will be even higher when trailers are connected, as the motion can amplify further back in the combination. If a truck deviates unintentionally from its intended lane it is apparent that an accident can be imminent. In both experiments the induced yaw rate was consistently on the border of, or even above, the limit suggested by Neukum *et al.* [98]; recommended as a safety limit for steering system failures. Hence, there are reasons to believe that the limits here are also well in line with disturbance criticality.

4.5 Implications of Aggregated Outcomes

A review of prior art has clarified that when considering steering wheel torque as a means of changing driver behaviour the time scale on which it should operate is critical. If the driver is required to comply on a short time scale (compared to typical cognitive delays

$\sim$0.2 s) then other alternatives should be sought[3]. If the time scale is longer, then overlaid steering wheel torque might prove effective. However, in any case the added torque must be in line with the cognitive objectives. In this chapter it has also been shown that there are ways to translate the findings of driver behaviour from cars to trucks. These will however always be rough, meaning that some final fine tuning of e.g. steering functions will be necessary when changing vehicle. Yet it is believed that the overall conclusions about how drivers respond to steering wheel torque are valid.

It has also been exemplified many times throughout this chapter that a yaw torque disturbance can cause substantial lateral deviation. When assisting the driver this is of particular interest on a short time scale; when considering the problems that exist when using steering wheel torque to achieve lateral movement. In contrast, when inducing a yaw torque that is not supporting the driver, but is rather serve as a direct threat, it must be ensured that the level is in line with what a driver can handle. The limits that have been derived by Neukum *et al.* [98], to define yaw torque criticality for alert drivers, have been verified as reasonable also for differential braking of trucks. These limits can hence serve as a good baseline when e.g. securing an AEBS design for split friction conditions.

Finally, based on prior art it has further been found that drivers do not seem to change their way of operating the vehicle when introducing ESC. They still steer the truck based on the same stimuli. A likely reason is that ESC typically only activates on rare occasions. This means that ESC should be developed with respect to how the driver acts, as there is no sign of the opposite, meaning that the driver will adapt to how the ESC system works.

[3]Benderius [77] stresses the risk that human drivers might become less precise in their actions when being subject to a high magnitude torque disturbance. This risk has not been satisfactorily researched. If proven false then it would be possible to safely affect drivers also on a short time scale.

Chapter 5

Design of Driver-centred Motion Control

This chapter describes the overall structure of the driver-centred motion control method that has been developed for truck motion control. The design has been formed from: i) the observations that have been made in the previous chapter about how truck drivers behave, and ii) heavy vehicle dynamics. The content is based on Paper IV[1] and Paper V[2].

5.1 Summarising Requirements

The purpose of the motion controller is to coordinate available motion actuators in order to fulfil longitudinal acceleration and directional control requests that have been set by either the driver or by higher functions. It is further assumed that the steering actuator on the front axle is a torque overlay actuator, which makes the driver part of the controlled vehicle loop. This means that the sought controller must be designed based on dynamical models of both vehicle and driver. This is illustrated in Fig. 5.1 for a truck towing a centre axle trailer. It is also the case that the driver can be affected by the set EPS torque. If the driver complies it will make the driver turn into a motion actuator controller. Yet, it is clear from chapter 4 that a driver cannot be treated as a simple servo system. The driver is a complex system that both provides inputs to the motion controller and under specific circumstances can be affected by the motion controller. Fig. 5.1 furthermore shows how a layered structure could be established with higher layer logical components acting on a slightly longer time horizon at the top and with lower layers acting on a shorter time horizon. The background of a layered structure was described in section 1.2. The focus here will be the layer that is denoted Vehicle Motion Control. It is however important to include parts of the other layers when evaluating the design.

As stressed earlier in the thesis, there are also other aspects that should be handled by the motion controller. The most important ones are repeated here in bullet form:

- It should be possible to adapt the method to any unique truck configuration.
- Braking, propelling and steering forces should be balanced in a way that ensures minimum deviation from both longitudinal acceleration and directional control de-

[1] In this chapter the term motion control includes both the part that is denoted as vehicle motion control and the part that is denoted as control allocation in Paper IV.

[2] Note that variables may be differently defined in this chapter than in the appended papers

mands. Propulsion will however not be considered here. This is outside the scope of the thesis, see section 1.2. Yet, there should not exist obvious limitations of how the solution can be extended to support also propulsion features and powertrain components.

- Vehicle stability should be maintained. This includes: i) yaw stability, ii) roll stability, and iii) articulation angle stability (making sure that the vehicle does not fold).
- Interaction with the driver, especially when considering stability control, should be improved compared to state-of-the-market implementations.
- When applying superimposed steering wheel torque it is important to consider what cognitive objectives the driver might have and at what rate the torque is allowed to vary.
- Yaw torque that acts as an unwanted disturbance must be limited to a level that the driver can handle. An example is when braking on split friction.
- The controller should be designed to support both normal driving and driving near the vehicle's handling limits.

In addition it is also important to consider relevant response times that are critical when trying to combine the strength in human flexibility with supporting motion actuators. An overview of response times that are typical are shown in Fig. 5.2. In general it is seen that actuators are faster than a driver. The dynamics of the vehicle are in some regards even slower. When considering that milliseconds are of crucial importance in a critical situation it can be concluded that actions must be taken in the right order.

5.2 Motion Control Architecture

Fig. 5.3 displays the main architecture of the driver-centred motion control method that has been developed. The intention has been to make it possible to fulfil all requirements that have been listed in the previous section. Moreover, the overall structure is layered which was discussed in an earlier section 1.2. The main benefit that this provides is, as described by Magnusson *et al.* [109], that it makes it possible to change a limited set of software components in order to adapt to unique truck configurations. This section will explain the quantities of Fig. 5.3 and also the intended operation of each layer, starting from the top.

The layer Higher Layer Functions serves as a lumped collection of all functions that control the vehicle on a higher abstraction level. An example would be an adaptive cruise control function or AEBS. In common for all functions that typically can operate on this level is that they all result in a scalar request of either longitudinal or lateral vehicle motion. This is represented in Fig. 5.3 with $\Delta a_{X,req}$ and $\Delta\omega_{Z,req}$ that are denoting in order a change in longitudinal acceleration and a change in vehicle yaw rate, both referring to the leading unit in the truck combination.

The layer Vehicle Motion Control contains first of all a Driver Interpreter that converts driver inputs to a desired longitudinal acceleration, $a_{X,req}$, and a desired yaw rate

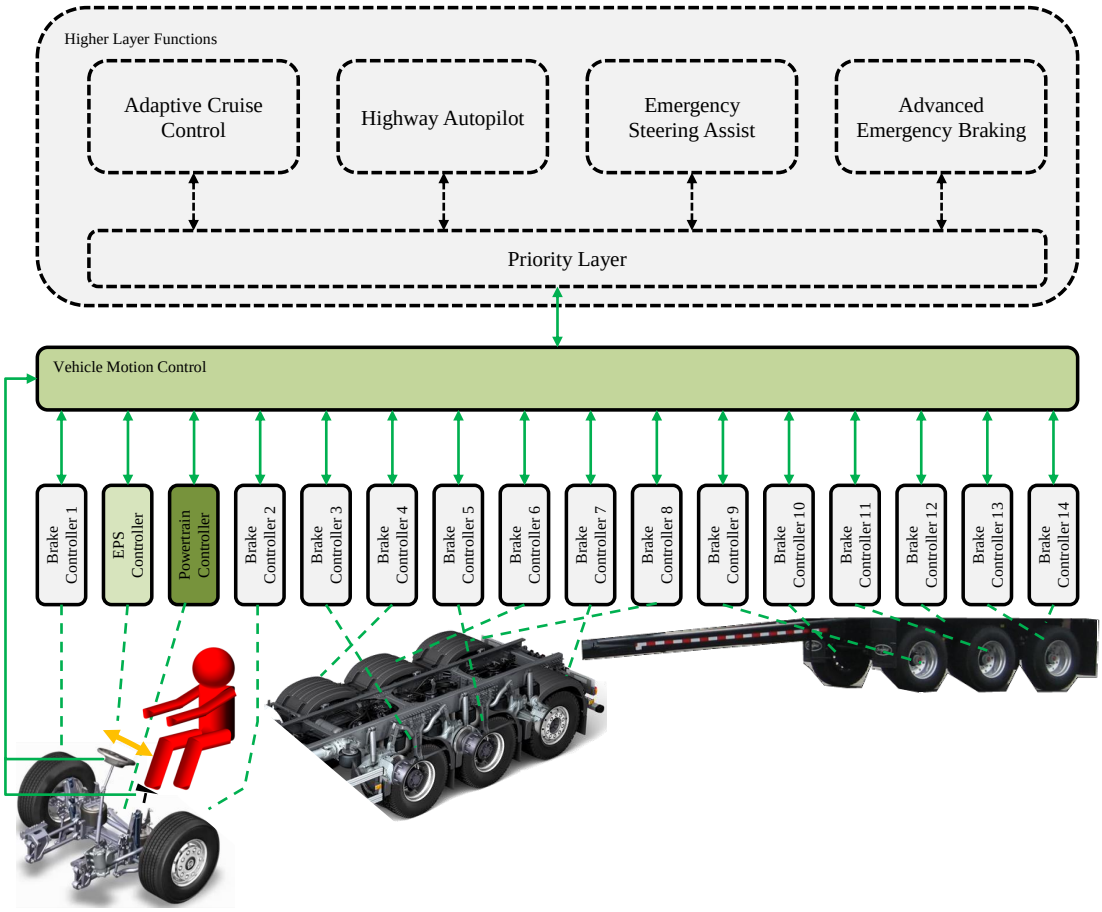

Figure 5.1: The driver is acting in parallel with the motion controller. At the same time the steering wheel torque can be set by the motion controller to guide the driver. Arrows indicate direction of relations.

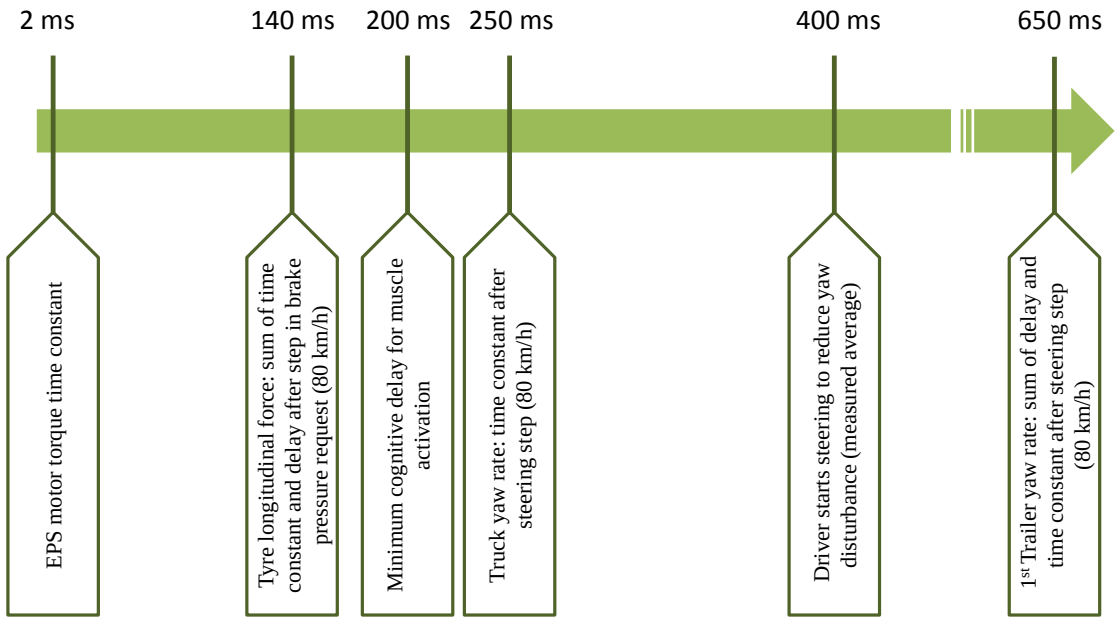

Figure 5.2: An overview of various response times that should be considered when performing motion control.

of the leading unit, $\omega_{Z,req}$. The driver interpreter furthermore calculates three additional quantities. The pair v_{min} and v_{max} are vectors and represent lower and upper limits on the longitudinal force and yaw moment; the exact dimensions of v_{min} and v_{max} will be explained in more detail later in this section. The pair becomes important when there is a conflict between the two requests $a_{X,req}$ and $\omega_{Z,req}$. An example of the use of v_{min} and v_{max} is when the driver is braking on a straight split friction road. This produces a conflict between deceleration and the desired zero yaw motion. Without the involvement of v_{min} and v_{max} it would only be possible to fulfil one of $a_{X,req}$ and $\omega_{Z,req}$ as they are in direct conflict. When introducing v_{min} and v_{max} in the example it is possible to prescribe how much yaw disturbance is allowed and, under these conditions, maximise deceleration. This means that v_{min} and v_{max} should contain estimates of how much disturbance a driver can handle. The Driver Interpreter also produces an estimate of how fast a reference steering wheel angle, used for overlaid steering wheel torque control, is allowed to change $\dot{\delta}_{H,max}$. This makes it possible to prescribe the time scale on which the driver is expected to comply with the steering wheel torque guidance, and thus avoid excessive reliance of fast driver response.

The block High-level Motion Control arbitrates the inputs $a_{X,req}$, $\Delta a_{X,req}$, $\omega_{Z,req}$, and $\Delta\omega_{Z,req}$ and produces a desired longitudinal force, $F_{X,req}$, and a desired overlaid yaw torque, $M_{Z,req}$, both acting on the leading unit in the combination. These two together form what is known as the virtual control vector $v = [F_{X,req}, M_{Z,req}]^\intercal$. The block will consequently be responsible for yaw stability. It should also care for roll stability control and articulation angle stability. Articulation angle instability, i.e. jack-knife or swing-out, could occur if neglecting the yaw motion of trailers.

The dashed block Motion Estimation is included in Fig. 5.3 to highlight the need for information about the state of the truck and trailer. This includes body side slip of all units, tyre forces, yaw rate, longitudinal velocity and more. In a production-like imple-

mentation the importance of this block becomes apparent when considering e.g. banked roads, undulating roads and the need for sensor redundancy. As the number of quantities that are produced by this block is high the corresponding signals have been omitted. Instead these quantities will follow implicitly throughout this chapter when other blocks are described.

The block Steering & Braking Coordination is responsible for synchronisation of all the individual motion actuators in order to fulfil virtual control requests. This includes the EPS unit, individual brake actuators on all wheels of the truck unit, and trailer brake action. This list of actuators is selected based on the limitations that were presented in section 1.3. Each actuator is expected to include a local servo controller, located in the Actuator Control layer. This is illustrated in Fig. 5.3 by six blocks. For instance there is an EPS Controller block that takes a reference angle, $\delta_{H,req}$, around which overlaid steering wheel torque is produced, as input and controls the EPS unit to fulfil this reference. The capability of the EPS unit is reported back to the Steering & Braking Coordination block with the vector signal $\delta_{H,c}$. This includes upper and lower limits for how much steering wheel angle the unit can produce. It should be noted that these limits are independent of road friction limits, which instead will be handled in a later step, as more than one actuator might be acting on a unique tyre. All other servo controllers on the lowest level in Fig. 5.3 operate analogously. The signal $T_{b,req,i}$ (where the index $i = \{1, 2, 3, 4, ..., N-1, N\}$ is denoting, in order, front left, front right, first rear left, first rear right, ..., last rear left, last rear right) is an individual wheel brake torque request; one for each of the N wheels of the truck unit. The corresponding capability vector is denoted $T_{b,c,i}$, also here independent from road friction limits. As the interface to control the brakes of a trailer most often is simple, meaning that it only accepts a scalar brake request, this is also reflected in the set-up by having a scalar trailer brake force request signal $F_{trailer,req}$. The signal represents the planar force that is acting in the connection between the truck and the first trailer (positive when truck is pulled backwards). The corresponding capability is denoted $F_{trailer,c}$, also here independent from road friction limits. It should however be noted that the block Brake Controller Trailer can be composed of several subcomponents, whereof some are physically located on the truck unit and some on a trailer unit, which naturally would be required as the ultimate control variable is the force that is acting between the two units.

The Brake Controller blocks and the Brake Controller Trailer block are all assumed to contain information about brake temperature, brake wear, brake gain factor, and wheel speeds; all necessary when performing brake servo control (see section 3.2). All these blocks are furthermore also assumed to include ABS, which becomes relevant when road properties change faster than the Steering & Braking Coordination block can handle.

Apart from all limitations coming from individual motion actuators, two additional major limitations must also be handled when synchronising actuators in the Steering & Braking Coordination block. The first one is formed by the previously mentioned pair v_{min} and v_{max}. These vectors have the same dimension as the virtual control vector v, more specifically, $v_{min} = [F_{X,min}, M_{Z,min}]^\intercal$ and $v_{max} = [F_{X,max}, M_{Z,max}]^\intercal$, where $F_{X,max}$ and $F_{X,min}$ represent upper and lower constrains of induced vehicle longitudinal force, whereas $M_{Z,max}$ and $M_{Z,min}$ represent upper and lower constrains of induced vehicle yaw torque. A normal procedure is to set $F_{X,max} = -F_{X,min} = \infty$ when braking performance is prioritised over yaw torque tracking, and in the opposite way set

$M_{Z,max} = -M_{Z,min} = \infty$ when yaw torque tracking is prioritised over braking performance. The other major constraint that should be part of the Steering & Braking Coordination block is that of friction. Several motion actuators might be acting on the same tyre. An example is EPS and the two brake modules that are connected to the front wheels. It is therefore not possible to locate friction limitations in the motion actuator servo layer as coordination is needed.

The ultimate goal of the Steering & Braking Coordination is to compute an optimal actuator vector defined as

$$u_t = [\delta_{H,req}, T_{b,req,1}, T_{b,req,2}, ..., T_{b,req,N}, F_{trailer,req}]^\intercal \tag{5.1}$$

Once u_t has been found it is also possible to compute the residual r. The residual is the difference between the requested virtual control vector and the control action achieved by the Steering & Braking Coordination block. The residual then becomes a measure of the infeasibility in the virtual control request. It can therefore be used in the High-level Motion Control block to achieve anti-windup.

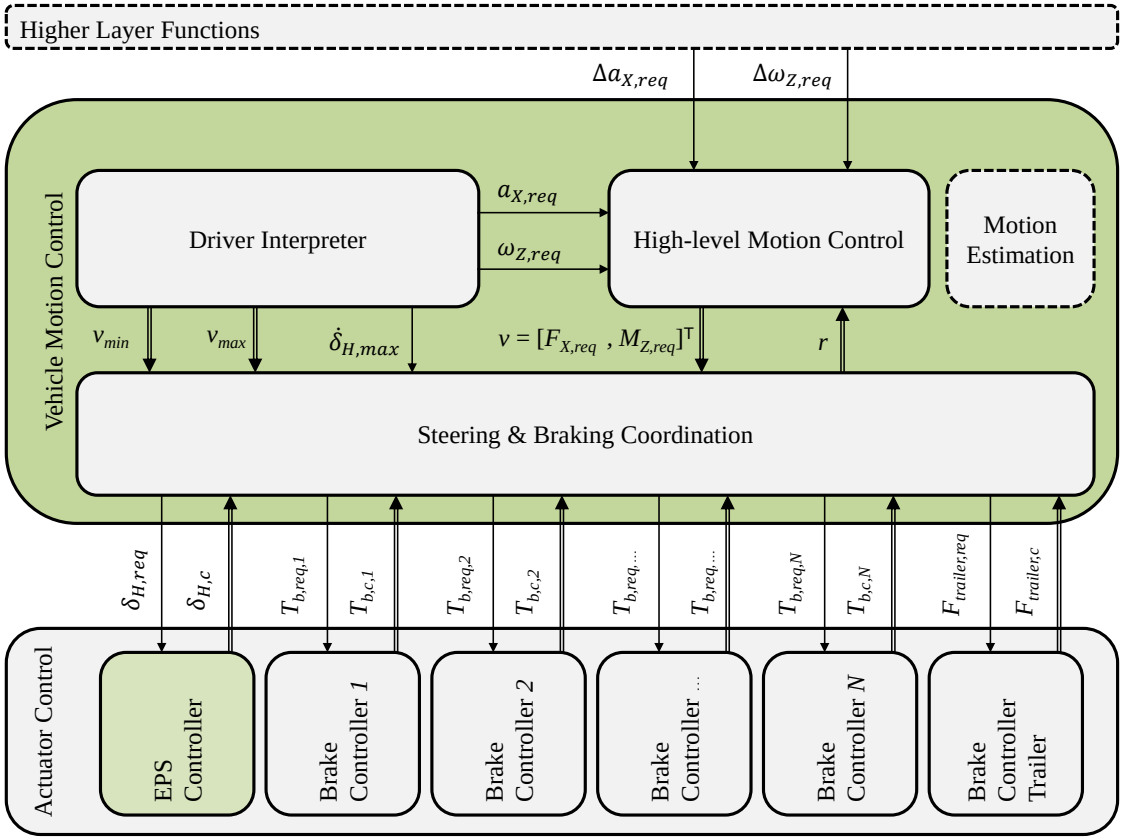

Figure 5.3: Main architecture for driver-centred motion control. Double lines are used for vector signals. Single lines are used for scalar signals. Dashed boxes indicate that only basic content has been implemented.

Now when all parts of Fig. 5.3 have been explained it is time to verify the developed architecture with respect to all requirements that were listed in section 5.1. To start with, as the structure is layered it is possible to change e.g. the set of actuators without

fundamentally changing higher layers. This will simplify future powertrain integration. Moreover the structure makes it possible to balance braking and steering, as the Steering & Braking Coordination block is responsible for synchronisation of both actuator coordination and driver guidance. Moreover, vehicle yaw, roll, and articulation stability are also handled[3]. Next, interaction with the driver is very much dependant on how the block Driver Interpreter is designed. This aspect will therefore be discussed in the next section, where the design is presented more in detail. This also relates to the importance that the system complies with the cognitive objectives of the driver. If the Driver Interpreter does not represent the true desire of the driver this means that all actuators can oppose the driver, including the overlaid steering wheel torque. In the worst case this can lead to uncontrollable oscillations. In aviation this is known as pilot-induced oscillations, which have been under extensive investigation because of a series of crashes [110]. One of the more well-known crashes was that of a SAAB J39 fighter aircraft in 1993, which took place during a flight show at a festival in Stockholm. Tens of thousands of spectators were present. Fortunately, no one was killed [111, 112].

In section 5.1 the importance of slowly varying steering wheel torque guidance is stressed. This is handled in the design with the limitation $\dot{\delta}_{H,max}$. The same applies for unwanted yaw disturbances, handled by v_{min} and v_{max}. Another aspect that should be reflected upon is the fact that a driver cannot be treated as a servo system, meaning that it cannot be assumed that the driver will comply with the steering wheel torque guidance that is provided. This means that in reality braking and steering actuation might deviate from that calculated in the Steering & Braking Coordination block. One example could be when the front axle of the truck is saturated in a turn (understeer) and the driver continuous to increase the steering wheel angle. Here the only feasible option would be to limit brake actuation on the front axle in accordance and to apply a steering wheel torque to try to guide the driver to less steering action [113]. This is also the intended behaviour of the motion control design. Finally, with respect to the question of response times it should be stressed that it is possible to handle also this in the design shown in Fig. 5.3 by making sure that the Steering & Braking Coordination block fulfils all constraints. However, response times of the actuators involved (brake and steering actuators) have been neglected as these respond a lot faster than both the driver and the truck combination itself[4], see Fig. 5.2.

5.3 Motion Control Components

This section will describe in more detail the underlying methods developed for the Vehicle Motion Control layer, shown in Fig. 5.3. The layer contains three components, meaning blocks. First of all the principles of the developed Driver Interpreter block are described. This is followed by a description of the High-level Motion Control block. Finally the Steering & Braking Coordination block will be discussed. The content of the Higher

[3]When multiple trailers are connected the stability of each trailer, e.g. with respect to excessive lateral slip, should be taken care of by the block Brake Controller Trailer. In practise this means that there might be several software components that together form this block, one for each trailer.

[4]A model predictive control implementation was performed in a similar set up by Sinigaglia *et al.* [1] where the dynamics of the actuators were considered in coordination. The benefit compared to an implementation with neglected dynamics however turned out to be small.

Layer Function layer will not be described further as this is out of scope for this thesis. This also applies to the Actuator Control layer seen in Fig. 5.3, where actuator servo control is performed.

5.3.1 Driver Interpreter

The Driver Interpreter block has five outputs. These will now be descried, one by one, starting with the acceleration request $a_{X,req}$. This quantity can be calculated using a map that translates the position of the brake pedal to an acceleration request $a_{X,req}$ (when considering also propulsion, the same holds for the accelerator pedal). The desired properties of such a map have been extensively documented at least for cars, see for example [114, 115]. As the brake pedal in a modern truck can be considered to operate by-wire this means that the map can be implemented using only software. This has made it easy for individual truck OEMs to tailor a profile known as brake feel. As manual braking is not considered in the tested applications, later presented in section 6, this map will not be developed further. Instead $a_{X,req}$ is assumed to be zero.

Historically the yaw rate request $\omega_{Z,req}$, alternatively denoted yaw rate reference, has been calculated by running the steering wheel angle through an ideal vehicle model with a desired level of understeer. This will most often form a first order lag [116]. However, as stressed by Markkula *et al.* [117] the steering wheel angle signal is often a poor measure of the cognitive desires of a driver. This can be realised when considering a solo truck that has lost the rear axle grip in a long curve, i.e. the truck oversteers. When this happens the driver will steer heavily in the opposite direction until the yaw rate of the truck has come to zero [104]. At this point in time the steering wheel will be directed in the opposite direction to the curve and the truck will be directed as illustrated in Fig. 5.4. The ultimate desire of the driver must roughly be to follow the profile of the road, i.e. $\omega_Z \approx v_x \kappa_R$ where ω_Z is the yaw rate of the truck and κ_R is the instantaneous road curvature. It is possible that the body side slip of the truck is reduced slowly while approaching this value, meaning that $\omega_Z \approx v_x \kappa_R$ still is a good approximate measure of what the driver desires. This is not possible to capture using the steering wheel angle signal, which will indicate that the driver's desire is to produce heavy yaw rate to the right, until the point where the driver redirects the steering wheel. Moreover, Markkula *et al.* [104] found that even experienced truck drivers will have a typical delay of about 0.25 s from when the yaw rate becomes equal to that required to follow the road until they redirect the steering wheel. This means that a reference that is purely based on the steering wheel angle signal will also be delayed. The alternative approach taken here is therefore different, with the purpose of better capturing the true desire of the driver. The details of the Driver Interpreter block used will not be described in more detail for confidential reasons. Nonetheless, measured values of $\omega_{Z,req}$ produced within an application will however be shown in chapter 6. The benefits that can be achieved with this new approach will also be discussed.

The limit $\dot{\delta}_{H,max}$ can be set as either a fixed parameter or may be dependent on the exact driving scenario. As discussed in section 4.4.3 a fixed value of around 6 N m/s would serve as an upper level of how fast that torque should be applied. This can be converted to a corresponding angular steering wheel angular rate when the EPS Controller block operation is known. In other words, the control principle that is used in the EPS Controller block provides a relation between the steering wheel angular rate and steering

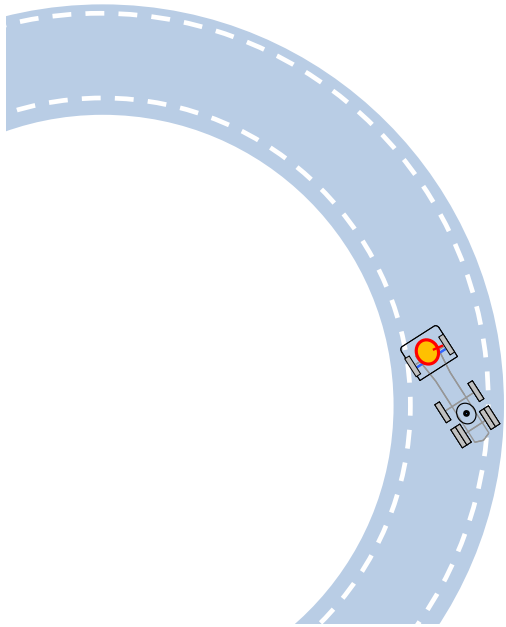

Figure 5.4: The truck has lost its rear axle grip and the driver is steering according to the indications in the yellow and red circles.

wheel torque. Moreover, higher values than 6 N m/s as a limit in steering wheel torque would only lead to excitation of spinal reflexes, and consequently poor compliance, see section 4.1.2. In situations where it is obvious that the cognitive objective of the driver is different from that of Higher Layer Functions it is also possible to vary the value of $\dot{\delta}_{H,max}$. As an example, when the driver is distracted by a secondary task several studies have shown that the compliance of a driver with respect to steering wheel torque guidance is low, again see section 4.1.2. Hence, when a Higher Layer Function requests a directional movement to avoid an obstacle $\dot{\delta}_{H,max}$ should be set low (even zero). This will force the Steering & Braking Coordination block to use differential brakes rather than steering torque guidance. As soon as the driver is assumed to regain attention $\dot{\delta}_{H,max}$ can be ramped up. This will automatically increase the level of torque guidance applied and slightly reduce the amount of applied differential braking.

The two vectors v_{min} and v_{max} can as previously described be used to limit both longitudinal force and yaw torque disturbances. However the most obvious application would be to limit a potential yaw torque disturbance. This will therefore be subsequently assumed, meaning that $F_{X,max} = -F_{X,min} = \infty$ and that $M_{Z,max}$ and $M_{Z,min}$ should be selected with some consideration. When considering how much yaw disturbance a driver can handle it is easier to estimate a steering wheel angle than a yaw torque. However, it is possible to deduce an approximate relation between the vehicle yaw torque, M_Z, and the steering wheel angle, δ_h, according to $M_z = K_{as}\delta_h$, where K_{as} is a vehicle-dependant parameter (see Paper IV for more details). If assuming that the driver is capable of applying a steering wheel angle of at most $\pm\delta_{as}$ to counteract a disturbance it means that $v_{max} = -v_{min} = [\infty\ ,\ K_{as}\delta_{as}]^\intercal$. It is also possible here to alter the value of δ_{as} depending on the state of the driver. For instance, if the driver is assumed to be distracted the value should be set low. On split friction this will impose a longer stopping distance. If the driver is assumed to be attentive, which e.g. can be assumed when the driver triggers

braking manually, the value can be set high. This will allow a higher yaw disturbance and will consequently also enable a shorter stopping distance on split friction.

5.3.2 High-level Motion Control

This block takes the inputs $a_{X,req}$, $\Delta a_{X,req}$, $\omega_{Z,req}$, and $\Delta\omega_{Z,req}$ to produce a desired longitudinal force, $F_{X,req}$, and a desired overlaid yaw torque, $M_{Z,req}$. It is possible here to use a range of control methods. Yet, as seen from experiments, even a low level of complexity is enough to get good performance in terms of reference tracking.

In the implementations used the considered longitudinal acceleration reference has been formed as the sum of $a_{X,req}$ and $\Delta a_{X,req}$. Analogously, a yaw rate reference has been formed as the sum of $\omega_{Z,req}$ and $\Delta\omega_{Z,req}$. The longitudinal acceleration controller has been set up as a simple open-loop controller, operating without acceleration feedback, according to

$$F_{X,req} = m(a_{X,req} + \Delta a_{X,req}) \tag{5.2}$$

where m is the total mass of the vehicle combination. An alternative to this controller is presented in Paper II; where a closed-loop controller has been verified in a truck.

The yaw rate controller is set up as a PI controller with anti-windup, resulting in a desired overlaid yaw torque according to

$$M_{Z,req} = K_P e_\omega(t) + K_I \int_0^t \Gamma(\xi) e_\omega(\xi) d\xi \tag{5.3}$$

where $e_\omega = \omega_{Z,req} + \Delta\omega_{Z,req} - \omega_Z$ is the control error, K_P is the proportional gain, K_I is the integral gain, t is current time, Γ is the anti-windup clamping function, and ξ is the integration time variable.

There are several approaches that can be taken in order to avoid the risk of roll over. The approach taken here is to limit the input quantity $\omega_{Z,req}+\Delta\omega_{Z,req}$ to a level dependant on centre of gravity height and possibly friction level. This approach is a straightforward simple approach, which is easy to implement. The drawback is that it relies on an accurate model of how the said limit should be set. Another alternative approach is to introduce a feedback mechanism that can detect e.g. wheel lift, and thereafter change the value of $M_{Z,req}$ directly. It can be argued that the risk of roll over connects to lateral acceleration rather than yaw motion. It is however possible to extend the virtual control vector v with another variable that represents a desired overlaid lateral force for this purpose, see [118].

5.3.3 Steering & Braking Coordination

Control allocation is commonly used for over-actuated systems, meaning that there are more actuators than controlled motions [119]. Here the vehicle is over-actuated since multiple wheel brakes are combined with a steering actuator, while only two motions are being controlled. Consequently multiple solutions might exist. With control allocation a solution is made unique by introducing a secondary objective; for instance the minimization of the l^2-norm of the actuator vector u as applied here. For more information about the different norms available see [120, 121]. By further using weighting matrices and relevant actuator constraints it is possible to control the characteristics of the solution, for

more details see Paper IV. The main difference in the implementation used here to previous implementations is the introduction of quadratic constraints in order to represent friction ellipses, while the problem is solved in real-time, and the introduction of v_{max} and v_{min} constraints. The usage of quadratic friction constraints enables a slightly higher resulting yaw torque compared to what is possible when using a linear approximation, as exemplified in [118].

The previously introduced vector u_t (defined in Eq. (5.1)) is expressed in actuator format, meaning that it represents the inputs that can be requested from actuators. In order to be able to get friction constrains represented on a quadratic form a new alternative actuator vector u must first be introduced. This is defined as

$$u = [F_{YTF}, F_{XT1}, F_{XT2}, ..., F_{XTN}, F_{trailer,req}]^\intercal \tag{5.4}$$

where F_{YTF} denotes the sum of lateral tyre forces acting on the front axle wheels and F_{XTi} denotes the longitudinal tyre force of wheel i. It is now possible to formulate a weighted quadratic allocation problem that includes all constraints needed according to

$$\begin{aligned} u^* =& \arg\min_u (\|W_u(u-u_d)\|_2^2 + \gamma\|W_v(Bu-\tilde{v})\|_2^2) \\ & \text{subject to } u_{min} \leq u \leq u_{max} \\ & \text{and} \quad \frac{1}{2}u^\intercal Hu + d \leq 0 \\ & \text{and} \quad v_{min} \leq Bu \leq v_{max} \end{aligned} \tag{5.5}$$

where u^* denotes the optimal value of the actuator vector u. Furthermore, W_u is a diagonal weighting matrix that can be used to prioritise the use of certain actuators, u_d is a desired set-point for u, γ is a scalar weight usually set high to emphasise the importance of the term $\|(Bu-\tilde{v})\|_2^2$. Moreover, B is known as the effectiveness matrix. It maps the actuator vector u to a resulting force and torque format (the same format as defined for v). The vector $\tilde{v}$ will be explained later, but can initially be considered equal to v. The diagonal weighting matrix W_v is used to emphasize what element in $\tilde{v}$ is of highest importance[5]. The upper and lower limits u_{max} and u_{min} should be set in order to include the limits that are defined by $\dot{\delta}_{H,max}$ and the capability signals $\delta_{H,c}$, $T_{b,c,i}$, and $F_{trailer,c}$. They should also include friction constraints for all wheels apart from the front wheels. The friction constraint on the front axle is instead represented by the matrix H and the scalar d. The reason why a quadratic form is only needed on the front axle is that this is the only place where both lateral (F_{YTF}) and longitudinal forces (F_{XT1} and F_{XT2}) are to be allocated.

In more detail, the limits u_{max} and u_{min} are expressed in terms of force limits, analogous to how u is defined in Eq. (5.4). By assuming small wheel steering angles it is possible to state that brake actuator limits should be handled by the longitudinal force constraints and EPS constraints should be handled by lateral force constraints. Expressed in other words, element $i+1$ of u_{max} and u_{min} should reflect $T_{b,c,i}$. Also the last elements of u_{max} and u_{min} can be directly taken from $F_{trailer,c}$. However the first elements of u_{max}

[5]In the case of split friction braking the first element, $F_{X,req}$, should be prioritized as described in section 5.3.1, together with suggested values of $M_{Z,max}$ and $M_{Z,min}$. When the truck exhibits substantial directional instability it is more favourable to instead prioritize the second element, $M_{Z,req}$.

and u_{min}, which are expressed as the upper and lower lateral force, should reflect the two quantities $\dot{\delta}_{H,max}$ and $\delta_{H,c}$. Clearly, these are not expressed in the same dimension as lateral force. Yet, a linear tyre model can serve as a link between the two. This procedure will be described more in detail later for the conversion of F_{YTF} to $\delta_{H,req}$.

Lateral forces can act on all wheels, even in the absence actuator involvement. These need to be considered when formulating the friction constraints. On the rear axles and on the trailer this is straightforward. Here the corresponding friction limits are implemented using u_{min}. An illustration of the friction constrains is shown in Fig. 5.5, where the vehicle front axle has saturated. The lateral force that is acting on a wheel due to lateral slip, when assuming δ_H, is marked with a green circle. Red circles represent elements in u^*. On the front axle the lateral sum of the two red circles form the optimal value of F_{YTF}. Red arrows represent force vectors that will arise as a consequence of the allocation step. As seen when a lateral force is acting on a rear tyre this affects the corresponding friction limitation that should be set in u_{min}. On the front axle the lateral force caused by lateral slip requires some special attention, as both lateral and longitudinal forces are to be allocated. To start with a desired set-point is set as $u_d = [F_{YTF0}, 0, ..., 0]^\intercal$, where F_{YTF0} represents the lateral tyre force[6] that is acting on the front axle due to lateral slip when assuming that $\delta_H = 0$. In Fig. 5.5 F_{YTF0} is equal to the sum of the two green circles on the front axle. With this setting of u_d the allocated lateral force F_{YTF} becomes symmetric in the vicinity of F_{YTF0}. Also, the request to the allocator needs to be modified according to

$$\tilde{v} = v + \begin{bmatrix} 0 \\ aF_{YTF0} \end{bmatrix} \tag{5.6}$$

where a is the longitudinal distance from centre of gravity to the front axle. The effect that this has on the optimal solution of Eq. (5.5) will be removed in a later step.

Given the definition of u in Eq. (5.4) and $\tilde{v}$ in Eq. (5.6) the effectiveness matrix becomes

$$B = \begin{bmatrix} 0 & 1 & 1 & ... & 1 & 1 & 1 \\ a & \frac{-b}{2} & \frac{b}{2} & ... & \frac{-b}{2} & \frac{b}{2} & -e\sin\Delta\Psi_n \end{bmatrix} \tag{5.7}$$

where e is the distance from the centre of gravity of the truck unit to the coupling point (positive backwards), and $\Delta\Psi_n$ is the yaw articulation angle between the truck and the first trailer unit. For more details on how to set W_u, W_v, γ, H and d in Eq. (5.5) see Paper IV and Paper V.

Once problem Eq. (5.5) has been solved and the optimal solution u^* has been found, a conversion is needed in order to get u_t. As for u_{max} and u_{min} this is straightforward for all elements except for the first one. If assuming small steering angles and neglecting transient wheel rotational acceleration, then $T_{b,i,req} \approx -F_{XTi}r_{stat}$ (see section 3.2). For

[6]The force F_{YTF0} is an important quantity that will affect the solution of the allocation problem very much. It must furthermore be estimated. In the performed real truck experiment this was done by using side slip estimates from a GNSS unit. This information was combined with a linear tyre model to arrive at an estimate. The estimation method should however be paid extra attention in a production like solution where robustness is required.

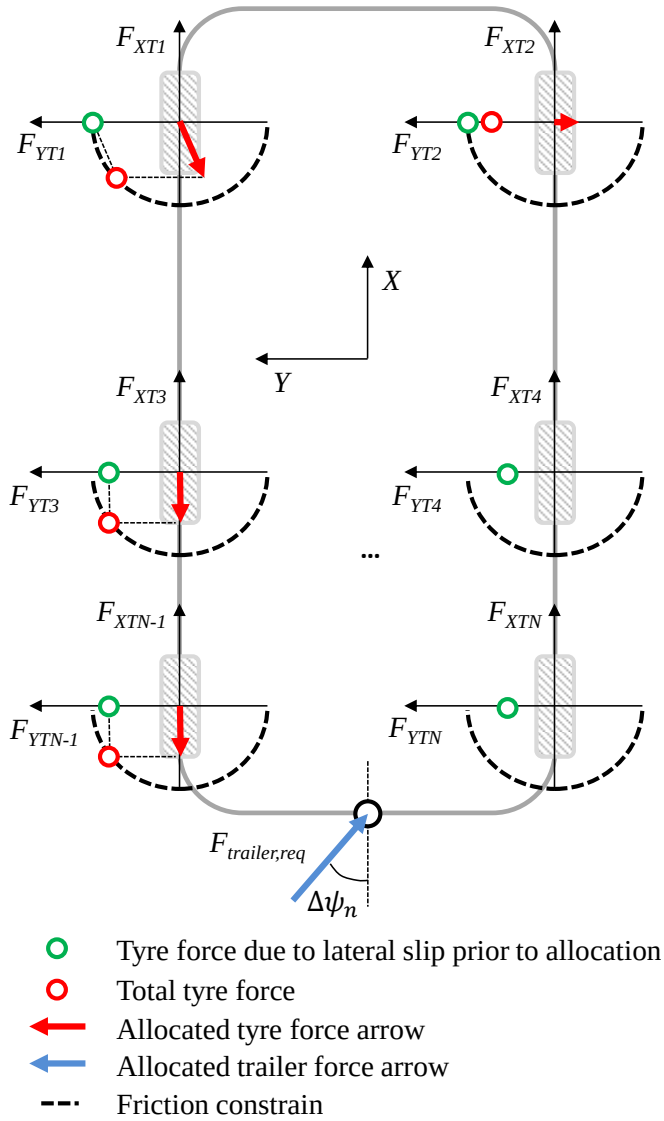

Figure 5.5: Illustration of how friction constraints are treated in the allocation step. Here the front axle of the truck is saturated prior to allocation and the allocated forces represent the highest possible yaw torque that can be created to turn the vehicle to the left.

lateral force conversion to steering wheel torque a linear tyre model can also be utilised here according to

$$\delta_{H,req} = i_s(F_{YTF} - F_{YTF0})/(\frac{\partial F_{YTF}}{\partial \alpha}) \tag{5.8}$$

where $\frac{\partial F_{YT}}{\partial \alpha}$ is the cornering stiffness of the front axle. In Eq. (5.6) F_{YTF0} was introduced to handle friction limitations. Here this is subtracted from F_{YTF}, which removes the overall effect that it has on the overall yawing torque. The angle $\delta_{H,req}$ can thereafter be converted into an overlaid steering wheel torque in the EPS Controller. This step should be worked out in compliance with the exact torque characteristic that is acting before applying superimposed torque, as exemplified in Fig. 4.1 in chapter 4, e.g. with respect to magnitude.

The allocation problem presented in Eq. (5.5), along with the remaining blocks in the Vehicle Motion Control layer have been successfully solved in real-time using the tool Forces Pro [122] on a rapid prototyping dSpace Autobox II. Sample rate has been tested up to 1100 Hz. Motion control systems, such as ESC or LKA, normally run at 100 Hz [5, 88]. The real-time execution of the developed set-up is therefore considered viable also on a standard production ECU having a clock frequency of about one tenth of that of the dSpace Autobox II [123, 124]. One further practical aspect of the problem presented in Eq. (5.5) is functional safety. Most automotive companies work according to the functional safety standard ISO 26262 [125], or plan doing so in a near future. Lost brake action, due to software or hardware failures, would in this standard classify as ASIL D, which is the highest level of defined hazard. This imposes very high requirements on both the solver and on all inputs going into the solver. One such example is friction estimates that serve as input. If friction is estimated as low compared to the actual value this would results in insufficient brake action. However, a possible simplification is to introduce an independent backup controller that can be activated when detecting e.g. longitudinal wheel slips that largely deviate from that expected. One example of a backup controller would be a map from longitudinal force and yaw torque requests directly to brake pressure and steer angle requests. This would lower the functional safety requirements on the control allocation controller.

A final remark should be made regarding the compatibility of the proposed method when introducing powertrain components such a combustion engine. A combustion engine is typically associated with slow dynamics compared to e.g. a brake actuator, which must be captured in the allocation step to achieve accurate tracking of requests in transient operation. Sinigaglia *et al.* [1] have shown that this is possible to achieve either by modelling the dynamics of all actuators as a linear system or by using rate constrains. The discontinuity that arises due to gear-shifting will however call for a different solution. The same holds for the operation of a differential, which is an important part of traction maximisation. For this purpose Källstrand [126] have developed several candidate extensions to the control allocation problem. Propelling electric motors on the other hand typically have fast dynamics. Here brake blending for energy conservation will instead be the key challenge. Control allocation is especially suitable for this purpose as the priority between different actuators can be controlled via the W_u matrix [120].

Chapter 6

Applications

This chapter presents three different studies wherein the developed driver-centred motion control method has been evaluated. The content is based on Paper IV, Paper V and an unpublished driving simulator study.

6.1 Selected Scenarios

The method that has been presented in chapter 5 for motion control can be used as part of a foundation in the software structure. This can be compared to an operating system in a personal computer; whereas higher layer functions can be compared to programs or applications. An operating system should support the use of many different applications. Similarly, the motion control method that has been developed here should support both foreseeable and unforeseeable higher layer functions. Moreover it should also handle all use cases that a truck combination could end up in. A use case is considered as a certain combination of environmental conditions, vehicle state and configuration and state of the driver. Therefore when combining the total set of possible use cases with only foreseeable higher layer functions the result quickly goes beyond manageable dimensions. The aim of this chapter is more modest. It serves two purposes. Firstly, it evaluates the developed method in three representative scenarios; and secondly it also exemplifies the use in these three scenarios. The word scenario is used to denote either a use case or a use case combined with a higher layer function.

As discussed in section 1.2 the three scenarios are: i) AEBS braking on a split friction surface, ii) directional stability control under low friction conditions, and iii) oncoming collision avoidance. Due to the varying nature of these scenarios three different evaluation methods have been applied, listed here as: i) computer simulation, ii) real vehicle test with test driver, and iii) a driving simulation study involving 39 professional truck drivers. This has also made it possible to illustrate the strengths and shortcomings of the different approaches.

The primary objective of the first study (denoted Application I) has been to evaluate the developed method when performing split friction braking, and where the driver's state of alertness can be expected to vary. This becomes especially relevant when the braking event is triggered by an AEBS, as this implies that the driver could be distracted. In the study a high-fidelity rigid 6×2 solo truck simulation model was the main tool used.

The primary objective of the second study (denoted Application II) has been to evaluate the Vehicle Motion Control layer and its interaction with the driver under slippery conditions. The study was run on a frozen lake in the northern part of Sweden. A real 4×2 solo tractor unit was used. Tests were run both unladen and laden.

The third study (denoted Application III) had the objective to evaluate the Vehicle Motion Control layer when receiving a directional request from a higher layer function to avoid an oncoming collision. The study was run in a moving base driving simulator. The underlying vehicle model comprised a 6×4 tractor unit towing a semi-trailer.

The following three sections will explain the set-up and the main results from the three applications, one by one. This is followed by a common discussion.

6.2 Application I: Split Friction Braking

UNECE [22] stipulates a split friction test that must be passed by all heavy vehicles. In the test the vehicle must not deviate laterally by more than half of its own width. Meanwhile steering corrections are allowed, but not more than '120° during the initial two seconds, and not more than 240° in all' [22]. These limits have been derived when considering normal braking. For trucks, especially short ones, this test will not be passed unless special limitations have been introduced, see Paper II. This is normally done by limiting the allowed difference in brake pressure between the left and right side of an axle. When AEBS has been introduced there is a risk that heavy split friction braking occurs when the driver is distracted. In the experiment that was described in section 4.4.1 drivers were not distracted and the vehicle was compliant with UNECE [22]. Still, some subjects deviated by more than half a meter when split friction braking was activated automatically. For a distracted driver there is consequently a risk that a high lateral deviation can cause an even more severe accident than the AEBS was trying to prevent in the first place. There should thus exist a way to limit the induced yaw torque based on the state of the driver. In the driver-centred motion control method that has been developed this is embodied by the parameter δ_{as}, which is easier to relate to driver capacity than the traditional limitation procedure on an axle level.

The use of δ_{as} has been evaluated using computer simulations. The high-fidelity model that was used has been developed by Volvo Group Trucks Technology over the past decade, where the undersigned has been involved. It has further been compared to the performance of real trucks many times. In the simulations a PID controller was used to represent an ideal driver; with the objective of keeping the lateral deviation at vehicle centre of gravity as low as possible. The simulated road was straight and peak friction, μ, was set to 1.0 under the left side wheels and 0.2 under the right side wheels. The motion control system was configured to prioritize braking performance ($W_v = \ diag\begin{bmatrix}1000 & 1\end{bmatrix}$), whereas, the limitation for a yaw disturbance was achieved by setting $v_{max} = -v_{min} = [\infty \ , \ K_{as}\delta_{as}]^\intercal$. Allocation was only performed amongst braking actuators of the truck unit. Simulations were run for $\delta_{as} = \{10^o, 20^o, 40^o, 60^o\}$. Automatic braking was activated after one second of simulation, where $\Delta a_{X,req}$ was ramped down from 0 to -6 m/s^2 after first passing a first order low-pass filter (with time constant 0.1 s). To avoid numerical problems[1] $\Delta a_{X,req}$ was ramped back to zero, using the same low-pass filter, when

[1]Instability appeared at low speed in the used ABS model.

speed had dropped below 4 m/s. $M_{Z,req}$ was set to zero. $F_{X,req}$ was set as in Eq. (5.2), with $a_{X,req}$ set to zero.

The basic results are shown in Fig. 6.1. In all cases the lateral deviation was just a few cm. The steering profile used can therefore be considered as a measure of how much steering activity is required from a driver in order to suppress the yaw disturbance. One first observation that can be made from Fig. 6.1 is that the stopping distance and achieved acceleration is, as expected, highly dependent on δ_{as}. The required steering action by the driver agrees roughly with what has been configured as δ_{as}. One possible point of improvement that could be drawn from the simulations would be to achieve an even better match between the set limit δ_{as} and the required steering angle. This would most likely require a more detailed model of the relation between steering wheel angle and yaw torque, or possibly also involve some type of feedback.

An obvious conclusion from the simulations is that when AEBS activates braking δ_{as} should be set low initially. When the driver shows signs of regaining attention the level can be increased gradually. For an alert driver the stopping distance could be made even shorter than is currently possible with static limits as stipulated by UNECE [22]. In other words, when accounting for actual response times of both vehicle and driver (see Fig. 5.2 where examples are shown) it is possible to improve the response of the vehicle even further.

6.3 Application II: Directional Stability Control on Ice

Here the motion controller was configured to prioritise yaw torque. The longitudinal force request was omitted in the allocation step[2]. The actuators involved were an EPS actuator and all brakes of the truck unit. As the yaw motion of the vehicle was considered to change slowly the $\dot{\delta}_{H,max}$ constraint was not implemented. This was also the case for the v_{max} and v_{min} constraints. No higher layer function was involved in the control set-up and driver pedal activity was zero. In order to avoid activation of brakes during normal driving the allocation problem was tweaked, see Paper V for more details.

Three manoeuvres were selected in order to excite understeer (high speed entering curve), oversteer (brake pulse on rear axle in curve) and a combination of the two (double lane change). The manoeuvres were marked by means of cones on the ice. In every other run the developed motion controller (hereafter in this section denoted ESC$^+$) was replaced by the standard ESC system fitted to the truck as a baseline reference (hereafter denoted ESC^0). For these runs steering torque guidance was not present. The test driver was instructed to follow the intended course to the best of his ability. The entry speed was selected to make it impossible to stay on the intended course without stability support. All manoeuvres were run both unladen and laden, apart from the high speed entering curve case, which was only run laden as the unladen vehicle was prone to oversteer.

Typical results from the double lane change manoeuvre are shown in Fig. 6.2 when the vehicle is laden. Entry speed was 65 km/h. Runs are presented as consecutive pairs as ice conditions quickly changed. All plots have the travelled distance s on the abscissa. Red colour is used for ESC^0 runs and blue for ESC$^+$ runs. Plots show in order: absolute

[2]When omitting one of the objectives in the allocation step this will affect the dimension of several variables. See Paper V for more details.

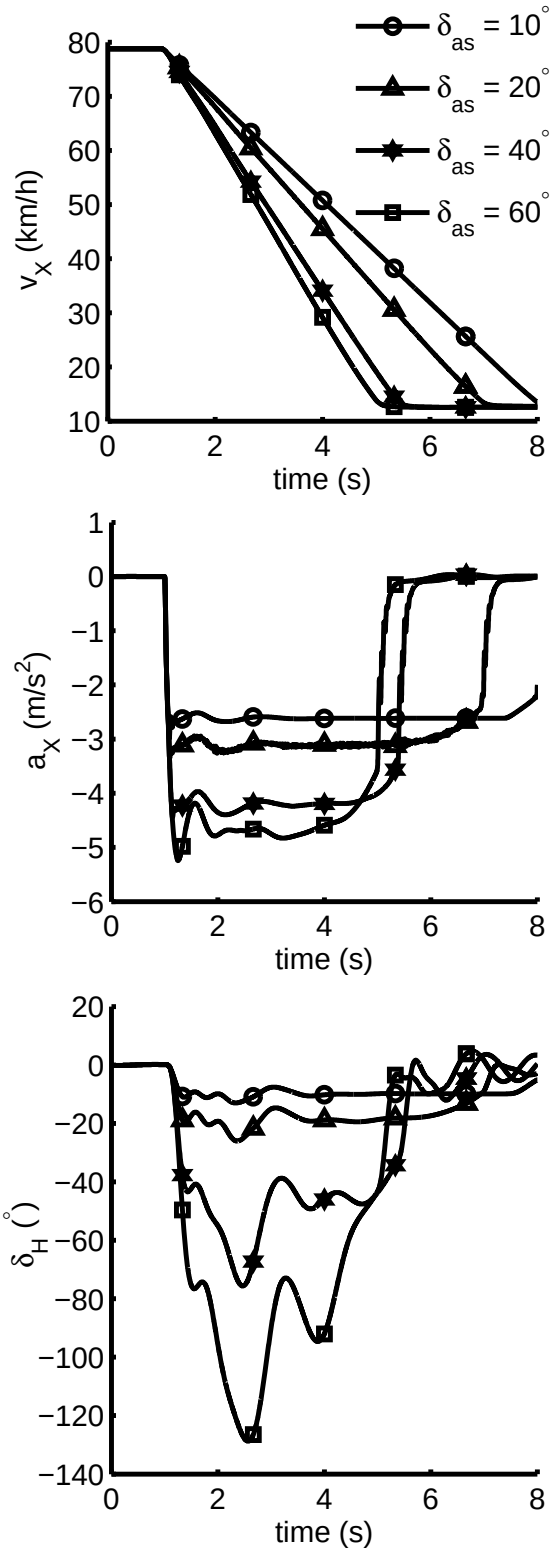

Figure 6.1: Results from split friction braking simulations in Application I. The subfigures show in order are longitudinal speed, v_X, longitudinal acceleration, a_X, and steering wheel angle, δ_H. Picture taken from Paper IV.

distance from the most distant point of the truck to the intended course, Δy_{max}; steering wheel angle, δ_H; steering wheel torque, M_H; commanded brake pressure after ABS limitation, P_B (dashed lines represent maximum of front left and front right and solid lines represent maximum of rear left and rear right); instantaneous curvature of the vehicle, κ (yaw rate divided by speed at centre of gravity); and body side slip at centre of gravity, β.

The maximum deviation from the intended course is kept below 1 m in all runs within the first part of the manoeuvre. In the later part (s >60 m i.e. when going back to original lane) the deviation is much lower in ESC$^+$ runs than in ESC^0. Driver steering wheel angular response also seems similar in the two cases up until s >60 m where a clear separation occurs as a cause of the course deviation. The steering wheel torque is very different in the two cases. This is due to the guiding steering wheel torque that is present for ESC$^+$. Whether this feature had an effect upon the driver in the runs is not clear. The driver did however comment about the apparent difference and stated that the magnitude was slightly higher than acceptable.

The brake pressure plots reveal that ESC^0 sometimes applies heavy brake action on the front axle. The commanded brake pressure from ESC$^+$ is more gentle as it contains friction constrains and is configured to strive for an optimal balance between braking and steering.

The instantaneous curvature plots include a solid blue and solid red line showing the actual values (ω_Z/v_X), thick dashed lines showing the corresponding driver references being used ($\omega_{Z,req}/v_X$), and a solid black line showing ω_Z/v_X from a reference run performed at low speed. The latter is considered to be close to the real road curvature. The ESC$^+$ reference is tracking the curvature defined by the road course a lot better than ESC^0 is doing. This is one of the reasons why earlier brake action can be applied by ESC$^+$ than by ESC^0, as it is able to track the ultimate desire of the driver better in general; which is to follow the road. This means that the mentioned deadband can be made tighter, compared to the deadband used in ESC^0. Moreover, when the reference used is closer to that defined by the road this means that the stability control can be made more driver independent. This is another way to say that the driver can focus on steering the vehicle rather than steering the ESC system[3]. A final observation from Fig. 6.2 reveals clear instability, when looking at body side slip, in the later part of the manoeuvre for ESC^0.

The results obtained from the laden double lane change manoeuvre contained most of the observations that were also confirmed in the other manoeuvres. Yet, there were some additional observations that are worth some attention. During understeer the superimposed steering wheel torque applied by ESC$^+$ became too high too quickly. As the front axle saturated the ESC$^+$ controller tried to limit the amount of excessive steering that the driver was applying by suggesting a more optimal level. When the driver exceeded this level a counteracting steering wheel torque appeared. The superimposed steering wheel torque set by ESC$^+$ furthermore sometimes changed too fast, compared to the limit that was derived in section 4.4.3. This was also confirmed by the test driver. An obvious solution would be to implement the $\dot{\delta}_{H,max}$ constraint that had been omitted and to limit the allowed magnitude of the applied torque.

In summary it can be said that the developed motion controller (ESC$^+$) achieved more

[3]When the reference of the ESC system is a crude interpretation of what the ultimate desire of the driver is, it can e.g. become more effective to steer excessively in an understeer situation solely to get more ESC support.

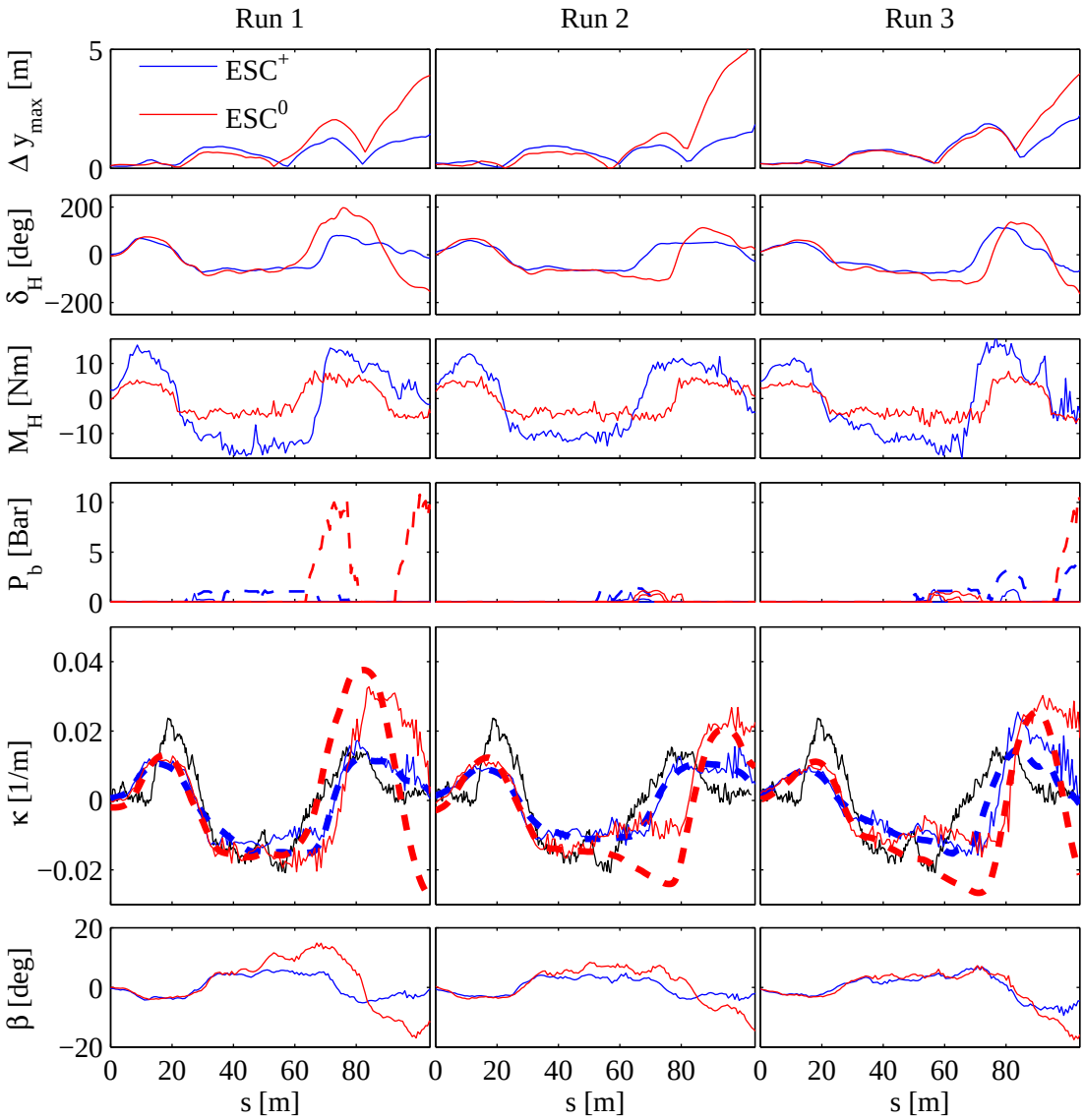

Figure 6.2: Laden double lane change results (Application II). Picture taken from Paper V.

effective stabilisation of the tractor unit in all manoeuvres than the baseline reference. Several reasons have been identified: i) steering and braking forces are co-synchronised, ii) the yaw rate reference used represented the true desire of the driver better, and iii) activation deadbands can be set tighter. There were also some suggested points of improvement.

6.4 Application III: Oncoming Collision Avoidance

A truck driving simulator study was set up in Sim IV, which is a moving base simulator [127], run by the Swedish National Road and Transport Research Institute. The study has not previously been published, but will be summarised here. A scenario was built up that represented a typical oncoming collision where a truck is involved. An approaching car drifted into the lane of the truck. The road was straight and the speed limit was set to 80 km/h, which was also the speed of the car. In more detail, the oncoming car started drifting out from its intended lane 2.2 s before the two vehicles would meet and continued drifting until reaching a projected overlap of 0.5 m with respect to the truck. This point in time was carefully selected to make it difficult for the subjects driving the truck to avoid a collision without support. The truck driver's view at the point where the car started drifting is shown in Fig. 6.3. Each lane was 3.25 m wide and the road shoulder was 1 m wide. The support system that was integrated had the purpose of assisting the truck driver in steering away from a collision. This was implemented by combining the developed motion controller with a higher layer function that initiated a steering manoeuvre slightly earlier than the time point when drivers normally responded.

The motion controller was tuned as in Application II with a few exceptions. It was turned on first 0.5 s after the car had started drifting. The activation time was tuned based on when subjects first started to experience an actual threat. As a trailer unit was attached, a brake force was also allocated to the trailer brake system. Moreover, here maximum deceleration was requested to reduce the speed, but priority was given to a yawing torque request, just like in Application II. Also, a higher layer controller was included that was generating an overlaid yaw rate reference, $\Delta\omega_{Z,req}$. This was done with means of a preview controller that was trying to move the truck 0.9 m sideways from its original position. The preview distance was 8 m and the preview gain was 16 (m/s^2)/m. The request from the preview controller was limited to ± 8 m/s^2 in order to avoid roll over and thereafter divided by v_X to get $\Delta\omega_{Z,req}$. One further aspect of the motion controller was that here the limit $\dot{\delta}_{H,max}$ was included. The limit was set close to zero initially. This made the motion controller initiate a steering manoeuvre without reliance on driver involvement, but instead using only the brakes. 0.5 s later $\dot{\delta}_{H,max}$ was ramped up to a high value (50 rad/s), which normally was how long it took for a subject to respond to the visual threat. This created a gradual increase of steering wheel torque guidance, and a gradual decrease of differential braking.

In total 39 professional truck drivers took part in the study. Data was successfully recorded for 37 of these, of which 18 were supported by the developed motion controller and 19 were not supported at all. Each session started with a training phase, lasting about 5 min, to get acquainted with the vehicle and the simulator. This was followed by the actual test, where the critical event occurred after about 10 min. In this part they were

instructed to run with cruise control at 80 km/h. Furthermore, subjects were not aware of the true purpose before entering the experiment and had seen several oncoming vehicles prior to the critical event. These precautions were taken to avoid anticipation amongst subjects.

All 19 subjects running without support hit the oncoming car. In 13 of these the front of the car hit the front of the truck. This typically looked like the case shown in Fig. 6.4a. In the remaining 6 cases the car hit the side of the tractor unit or the trailer. Of the 18 subjects running with support 14 managed to avoid hitting the car. This typically looked like the case shown in Fig. 6.4b. In the remaining 4 cases the car hit the side of the trailer's rear part. None of the 18 subjects running with support left the road and they did not enter the oncoming lane. Several subjects running without support left the road and some had problems with yaw instability. A χ^2 test reveals a strong statistical difference between the overall hit rate of the group running with support and the group running without support. This proves the fact that it is possible to override a driver with a directional input in a critical situation without causing instability. Recall the pure steering wheel torque approach that was discussed in section 4.1.2, where the same was considered impossible.

Figure 6.3: Scene in the driving simulator study (Application III). Both the car and the truck are travelling at 80 km/h.

6.5 Common Discussion

The three applications that have been described in this chapter have demonstrated that the developed driver-centred motion controller can be used for many purposes. With respect to the requirements that were listed in section 5.1 the following observations should be stressed. The developed method has been adapted for three unique truck configurations. Next, Application II demonstrates the benefit of balanced braking and steering forces. Moreover, all three applications have shown improved stability. Interaction with the driver

(a) Without support. **(b)** With support.

Figure 6.4: Two typical cases from the oncoming collision scenario (Application III).

has been shown in three ways: i) how to interpret the desire a driver has, ii) how to involve higher layer functions without causing a conflict with the driver, and iii) how to limit a yaw disturbance so that it is possible to handle for the driver. Furthermore, the possibility of limiting the rate at which steering wheel torque guidance is applied has also been shown. Yet, the effect that the applied steering wheel torque has on the drivers has not been fully explored and is therefore proposed for future work.

Chapter 7

Concluding Remarks & Future Challenges

In this chapter the overall conclusions that can be drawn from previous chapters are presented. This is followed by ideas that have been identified for future research.

7.1 Conclusions

Development of driver-centred motion control for heavy trucks is an important step towards improved traffic safety. This has been the focus of this thesis. Driver behaviour has been analysed and has resulted in several conclusions. These conclusions have formed the basis of a longitudinal and directional control method that has been proposed. This method has thereafter been implemented and tested in three applications that all represent important traffic safety problems. For the first application a demonstration of split friction braking, when considering that the driver's level of attention can vary, has been performed. Directional stability control has been the focus of the second application, where the developed method was compared to the ESC system that was fitted to the truck. The third application has focused on oncoming collision avoidance.

The first question that has been analysed with respect to driver behaviour is whether it is possible to affect a driver with overlaid steering wheel torque. This has led to the conclusion that only slowly changing torque guidance can be expected to have an effect upon the motion of the vehicle, when assuming that the magnitude is kept below reasonable limits. Typical human cognitive delay ($\sim$0.2 s) can be used as a limit to define what slowly means. Yet, a slowly changing steering wheel torque contribution can only have an effect upon the motion of the vehicle when the cognitive objectives of the driver coincide with the guidance. This was for instance demonstrated in a driving simulator experiment run by Melman *et al.* [88] where subjects supported by an LKA function hit far less cones that had been put on the sides of the lane.

In order to be able to fully utilise prior art in the field of steering, and to be able to transfer steering torque functions between vehicle types, it is important to establish an understanding of how steering wheel torque should scale as vehicle dimensions change. It can be concluded that some tuning will always be required when functions are e.g. transferred from cars to trucks. It is however possible to start by using two simple general rules, describing how to scale functions and results when important dimensions change. Firstly, a driver perceives force rather than torque. Secondly, yaw rate gain is the primary

property that a driver perceives as the response variable of a vehicle.

The number of heavy trucks that are equipped with AEBS will grow in number in the coming years, as fleets are renewed and as more countries enact laws. Also, the number of scenarios targeted by AEBS will grow. All in all this will make it more likely that AEBS will activate more often on split friction. Similarly to a front tyre blow out, this will cause the vehicle to decelerate with an acting yaw torque disturbance. As trucks have positive steering offset at ground this will furthermore lead to a destabilising steering wheel torque disturbance. It has been found that the magnitude and rate at which the torque is applied will limit its effect upon the motion of the vehicle, when the driver is gripping onto the steering wheel. For an incapacitated driver the effect can be a lot higher. With respect to the ability of drivers to handle a yaw disturbance it has been found that the limits that were developed by Neukum *et al.* [98], where above a failure can be considered as dangerous, are also relevant for trucks. The performed studies further proved that differential braking can be used as a tool to override a driver, in particular when fast directional movements are required. The developed motion controller has therefore been designed to combine differential braking and steering wheel torque guidance. The rate at which the torque guidance should be allowed to change can be set by a parameter. The method further demonstrates the benefits that can be achieved when steering and braking are commonly coordinated.

The three applications that have been demonstrated show that it is enough to build only one method for motion control and still achieve good performance. When more and more higher layer functions are to be introduced, e.g. as new sensors are available, it is not only convenient to have this type of hierarchical control design as a foundation, it will most likely even become a necessity. A unique operating system cannot come with every application that is to be installed. That would drive a huge cost and limit the growth of innovations.

The driving simulator study that has been run on the topic of oncoming collision avoidance represents a clear example that it is possible for a human driver and a computer to share the control of a vehicle; also in the lateral direction. Moreover, when starting to consider further use cases where the developed motion controller can be applied it is apparent that an immense safety benefit could be elicited. Some examples of potential benefits include: i) collisions caused by unintentional lane departures where the driver is incapacitated or distracted, ii) collisions with unprotected road users, iii) collisions at intersections, iv) run off road accidents, v) collisions with animals, and vi) accidents caused by a jack-knife.

7.2 Future Steps

Two of the tested applications involved steering wheel torque guidance. It has not yet been shown, however, whether or not this actually changed the actual steering wheel response of the driver. Therefore it is proposed that further studies of the real world effects of steering torque guidance should be performed, particularly with respect to functions like LKA where the torque can be expected to change slowly and where the cognitive objectives of the driver act as gate-keepers. It is further believed that the outcomes of such studies therefore will be highly dependent on the exact design of the analysed function. In

studies like [25], where the effects of ESC have been evaluated, it is common to generalise findings for many car or truck makes. If generalisation is used also in crash studies of LKA this will veil individual differences of different makes. These differences can be substantial.

Cicchino and Zuby [37] stress the fact that many accidents occur because of the driver being incapacitated. Hence, it is important to be able to bring the vehicle to a safe stop, without demanding driver action. This has not been tested in any of the applications and is therefore proposed for future research.

Another aspect that is important to investigate in the context of motion control is friction estimation. In all the tested applications the coefficient of friction has been assumed to be known. This must therefore be developed and tested before it can be taken one step further and be implemented on roads.

Economic and environmental motives for longer and heavier truck combinations have made many countries around the world extend their legal limits [128, 129, 130]. This might imply that a typical future truck combination has more units than is currently the case. This thesis has mainly focused on the stability of the leading unit in the combination and not on the following units. As the number of trailers grows the importance of this will also grow. The developed motion control method should therefore preferably be extended to also handle these aspects.

One final point that is of importance to solve in future research is to create seamless transitions between different applications. The applications that have been tested here all had different priority settings and constraints. In a fully integrated solution this could be solved by situation dependent priority switching, which naturally belongs to the Priority Layer of the Higher Layer Functions.

Chapter 8

Summary of Appended Papers

This chapter provides a short summary of the appended papers.

8.1 Paper I

In this paper a relation between the steering wheel size and steering wheel torque assistance is established. A test was set up with 17 subjects, all driving a truck. The steering wheel size was changed by using three different steering wheels. In the first part of the test subjects were instructed to select their preferred level of steering wheel torque feedback. The second part provided an objective approach where steering wheel torque pulses were applied when subjects were driving around a handling track. Results show that torque feedback should decrease as the steering wheel diameter becomes smaller. A good rule of thumb is to keep the driver force level constant to maintain perceived handling and comfort. This will also maintain the average steering wheel angular change when applying a pulse.

8.2 Paper II

When AEBS has been introduced there is a risk that automatic activation of split friction braking can occur. This paper analyses how a driver would respond in such a scenario. Furthermore, as trucks have positive steering offset at ground they produce a destabilising steering wheel torque when braking on split friction. The influence of this component is also analysed from the background of driver behaviour. The paper is built upon an experiment with 24 subjects where automatic split friction braking was emulated using a truck. Findings are analysed further by using a driver-vehicle model. It is concluded that the destabilising steering wheel torque that is induced during the braking event has a small effect on the motion of the vehicle. The underlying reason is a relatively slow ramp up of the disturbance in comparison to the observed cognitive delay amongst subjects; also the magnitude is low and initially suppressed by passive driver properties.

8.3 Paper III

A front tyre blow-out produces a similar situation to that of automatic braking on split friction. This paper investigates data collected during the same experiment as in Paper II, but where only one wheel was locked. This is argued to be equivalent to a front tyre blow out. The role of the steering axis offset at ground is investigated further. Results show that the average lateral deviation produced from the original direction was 23 cm, when the offset was 12 cm, compared to 16 cm, when the offset was 0 cm. The main cause of the observed difference was a small, yet significant, initial overshoot in steering wheel angle, which can be derived from the destabilising steering wheel torque. The torque produced became slightly higher in magnitude in this part of the experiment compared to that of Paper II.

8.4 Paper IV

This paper describes how the two constraints v_{min} and v_{max} of the developed motion controller can be used during split friction braking to account for driver distraction. A computer simulation is presented where the method has been applied. Results show that the set limit agrees well with what is also required by the driver. Moreover, the stopping distance is very much affected by the set limit, as expected. It is further concluded that this approach will also make it possible to estimate the stopping distance, even before an intervention has occurred, and with this input activate AEBS in accordance. The set-up has the potential to shorten the stopping distance when the driver is assumed to be active, in comparison to currently available systems. The approach is feasible for real-time applications and requires only measurable vehicle quantities for parameterisation.

8.5 Paper V

The introduction of EPS has enabled active steering torque support. As steering is an effective way of escaping directional instability and brakes are fast and decoupled from the driver, a combination of controlled steering and braking would be beneficial when performing directional stability control. The developed driver-centred motion controller is therefore proposed for this purpose. The method is unique in that it uses combined quadratic lateral and longitudinal tyre friction constraints computed in real-time, which has the potential to produce a higher corrective yaw torque than the commonly used approach with linear constraints. The method has been tested and compared to a standard stability control system in three different manoeuvres using a heavy solo tractor unit on a frozen lake. The measured deviation from the intended path was observed to reduce up to several meters with the new method. The driver rating also improved.

Bibliography

This list of references is only valid for the preceding chapters of the thesis, not for the appended papers.

[1] A. Sinigaglia, K. Tagesson, P. Falcone, and B. Jacobson, "Coordination of motion actuators in heavy vehicles using model predictive control allocation", in *2016 IEEE Intelligent Vehicles Symposium*, IEEE, 2016, pp. 590–596.

[2] K. Tagesson, *Truck steering system and driver interaction*, Chalmers University of Technology, Thesis for degree of licentiate of engineering, 2014.

[3] K. Tagesson, B. Jacobson, and L. Laine, "Driver response to automatic braking under split friction conditions", in *Proceedings of the 12th International Symposium on Advanced Vehicle Control*, 2014.

[4] R. Roebuck, A. Odhams, K. Tagesson, C. Cheng, and D. Cebon, "Implementation of trailer steering control on a multi-unit vehicle at high speeds", *Journal of Dynamic Systems, Measurement, and Control*, vol. 136, no. 2, 2014.

[5] K. Tagesson, P. Sundström, L. Laine, and N. Dela, "Real-time performance of control allocation for actuator coordination in heavy vehicles", in *2009 IEEE Intelligent Vehicles Symposium*, IEEE, 2009, pp. 685–690.

[6] J. Poushter, "Smartphone ownership and internet usage continues to climb in emerging economies", *Pew Research Center: Global Attitudes & Trends*, 2016.

[7] International Transport Forum, "Trends in the transport sector 1970-2010", OECD ITF, Tech. Rep., 2012.

[8] United Nations, *66/288 The future we want*, Rio de Janeiro, 2012.

[9] World Freight Rates, *Freight Calculator*, Online `www.worldfreightrates.com`, Visited 011116.

[10] World Health Organization, *Global status report on road safety 2015*. World Health Organization, 2015.

[11] Intergovernmental Panel on Climate Change, *Climate change 2014: Mitigation of climate change*. Cambridge University Press, 2015, vol. 3.

[12] F. Cuenot, L. Fulton, and J. Staub, "The prospect for modal shifts in passenger transport worldwide and impacts on energy use and CO 2", *Energy Policy*, vol. 41, pp. 98–106, 2012.

[13] United Nations Office on Drugs and Crime, *Global study on homicide 2013*. United Nations, 2013.

[14] C. Tingvall and N. Haworth, "Vision zero: An ethical approach to safety and mobility", in *6th ITE International Conference Road Safety & Traffic Enforcement: Beyond*, vol. 1999, 2000.

[15] K. Laych, V. Alexeev, and O. Latipov, *IRF world road statistics 2015*. International Road Federation (IRF), 2015.

[16] Australian Department of Infrastructure and Regional Development, *Australian road deaths database*, Online `https://bitre.gov.au/statistics/safety/fatal_road_crash_database.aspx`, Visited 041116.

[17] New Zealand, Ministry of Transport, *Road crash statistics*, Online `http://www.transport.govt.nz/research/roadcrashstatistics/`, Visited 041116.

[18] Volvo Trucks Accident Research Team, "European accident research and safety report 2013", Volvo Truck Corporation, Tech. Rep., 2013.

[19] Bureau of Infrastructure, Transport and Regional Economics, "Heavy truck safety: Crash analysis and trends", Department of Infrastructure and Regional Development, Australia, Tech. Rep. Information sheet 78, 2014.

[20] N. T. Black and W. Ertel, *Introduction to artificial intelligence*. Springer Science & Business Media, 2011.

[21] S. Kharrazi, "Steering based lateral performance control of long heavy vehicle combinations", PhD thesis, Chalmers University of Technology, 2012.

[22] UNECE, *Addendum 12: Regulation No. 13, Revision 7*, 2011.

[23] European Union, *Regulation (EC) No 661/2009*, 2011.

[24] NHTSA, *49 CFR Part 571, Docket No. NHTSA-2015-0056: Federal Motor Vehicle Safety Standards; Electronic Stability Control Systems for Heavy Vehicles*, 2012.

[25] A. Høye, "The effects of electronic stability control (ESC) on crashes, an update", *Accident Analysis & Prevention*, vol. 43, no. 3, pp. 1148–1159, 2011.

[26] J. Woodrooffe, D. Blower, T. Gordon, P. E. Green, B. Liu, and P. Sweatman, "Safety benefits of stability control systems for tractor-semitrailers", NHTSA, Tech. Rep. DOT HS 811 205, 2009.

[27] G. Markkula, O. Benderius, K. Wolff, and M. Wahde, "Effects of experience and electronic stability control on low friction collision avoidance in a truck driving simulator", *Accident Analysis & Prevention*, vol. 50, pp. 1266–1277, 2013.

[28] European Union, *Commission regulation (EU) No 347/2012 of April 2012*, 2012.

[29] Insurance Institute for Highway Safety, "Status report, vol. 51, no. 2", Highway Loss Data Institute, Tech. Rep., 2016.

[30] B. Fildes, M. Keall, N. Bos, A. Lie, Y. Page, C. Pastor, L. Pennisi, M. Rizzi, P. Thomas, and C. Tingvall, "Effectiveness of low speed autonomous emergency braking in real-world rear-end crashes", *Accident Analysis & Prevention*, vol. 81, pp. 24–29, 2015.

[31] J. Cicchino, "Effectiveness of forward collision warning systems with and without autonomous emergency braking in reducing police-reported crash rates", *Arlington, VA: Insurance Institute for Highway Safety*, 2016.

[32] A. H. Eichelberger and A. T. McCartt, "Volvo drivers' experiences with advanced crash avoidance and related technologies", *Traffic injury prevention*, vol. 15, no. 2, pp. 187–195, 2014.

[33] H. Leyendecker, G. Mascolo, and N. Richter, "Lkw-bremssystem verhinderte noch mehr tote in berlin", *Süddeutschen Zeitung*, 2016.

[34] A. Taylor, "It's nearly impossible to stop terrorists from using trucks as weapons. here's what cities are trying.", *The Washington Post*, 2017.

[35] D. A. Abbink, M. Mulder, and E. R. Boer, "Haptic shared control: Smoothly shifting control authority?", *Cognition, Technology & Work*, vol. 14, no. 1, pp. 19–28, 2012.

[36] S. Sternlund, J. Strandroth, M. Rizzi, A. Lie, and C. Tingvall, "The effectiveness of lane departure warning systems—a reduction in real-world passenger car injury crashes", *Traffic Injury Prevention*, vol. 18, no. 2, pp. 225–229, 2017.

[37] J. B. Cicchino and D. S. Zuby, "Prevalence of driver physical factors leading to unintentional lane departure crashes", *Traffic injury prevention*, to be published.

[38] Insurance Institute for Highway Safety, "Status report, vol. 51, no. 1", Highway Loss Data Institute, Tech. Rep., 2016.

[39] European Union, *Commission regulation (EU) No 351/2012 of April 2012*, 2012.

[40] I. J. Reagan and A. T. McCartt, "Observed activation status of lane departure warning and forward collision warning of honda vehicles at dealership service centers", *Traffic injury prevention*, vol. 17, no. 8, pp. 827–832, 2016.

[41] H. Karim, *Improved road design for future maintenance–analysis of road barrier repair costs*, Royal Institute of Technology, Thesis for degree of licentiate of engineering, 2008.

[42] European Union, *Commission directive 2006/20/EC*, 2006.

[43] J. Strandroth and M. Rizzi, "In–depth analysis of accidents with heavy goods vehicles - effects of measures promoting safe heavy goods traffic", Swedish Road Administration, Tech. Rep. 2009:2, Jan. 2009.

[44] M. Brännström, E. Coelingh, and J. Sjöberg, "Decision-making on when to brake and when to steer to avoid a collision", *International Journal of Vehicle Safety 1*, vol. 7, no. 1, pp. 87–106, 2014.

[45] Y. Jia and D. Cebon, "Field testing of a cyclist collision avoidance system for heavy goods vehicles", *IEEE Transactions on Vehicular Technology*, vol. 65, no. 6, pp. 4359–4367, Jun. 2016.

[46] F. Vlk, "Handling performance of truck–trailer vehicles: A state–of–the–art survey", *International Journal of Vehicle Design*, vol. 6, no. 3, pp. 323–361, 1985.

[47] ECE, *UN Vehicle regulations - 1958 Agreement, Addendum 12: Regulation No. 13, Revision 7*, 2011.

[48] S. Kharrazi, M. Lidberg, P. Lingman, J.-I. Svensson, and N. Dela, "The effectiveness of rear axle steering on the yaw stability and responsiveness of a heavy truck", *Vehicle System Dynamics*, vol. 46, no. S1, pp. 365–372, 2008.

[49] Volvo Trucks, *Volvo dynamic steering a breakthrough for effortless steering without strain or pain*, Press information, 2013.

[50] ZF, *Zf steering systems unveils energy saving high-tech solutions for the commercial vehicle segment*, Press Information, Sep. 2012.

[51] Bosch, *Servolectric, electromechanical steering system for a dynamic driving experience and highly automated functions*, 2015.

[52] J. Albus, H.-m. Huang, A. Lacaze, M. Schneier, M. Juberts, H. Scott, S. Balakirsky, P. W. Shackleford, T. Hong, J. Michaloski, F. Proctor, W. Shackleford, A. Wavering, T. Kramer, S. Legowik, N. Dagalakis, W. Rippey, K. Stouffer, R. Bostelman, J. Evans, A. Jacoff, R. Norcross, J. Falco, S. Szabo, J. Gilsinn, R. Bunch, T.-M. Tsai, T. Chang, A. Meystel, A. Barbera, M. L. Fitzgerald, M. del Giorno, R. Finkelstein, E. Messina, E. Messina, K. Murphy, and K. Murphy, *4d/rcs: A reference model architecture for unmanned vehicle systems version 2.0*, 2002.

[53] M. L. Aust, L. Jakobsson, M. Lindman, and E. Coelingh, "Collision avoidance systems-advancements and efficiency", SAE Technical Paper, Tech. Rep., 2015.

[54] ISO, *International Standard 8855 Road vehicles – Vehicle dynamics and road-holding ability – Vocabulary*, 2011.

[55] T. D. Gillespie, *Fundamentals of vehicle dynamics*. Society of Automotive Engineers Warrendale, PA, 1992.

[56] W. Milliken and D. Milliken, "Race car dynamics", *SAE, Warrendale*, 1995.

[57] UNECE, *Addendum 78: Regulation No. 79, Uniform Provisions Concerning the Approval of Vehicles with Regard to Steering Equipment, Revision 2*, 2005.

[58] M. Rothhämel, "Characterisation and utilisation of steering feel in heavy trucks", PhD thesis, KTH, 2013.

[59] C. B. Winkler, "Simplified analysis of the steady-state turning of complex vehicles", *Vehicle System Dynamics*, vol. 29, no. 3, pp. 141–180, Mar. 1998.

[60] ISO, *International standard 14792, Road vehicles - Heavy commercial vehicles and buses - Steady-state circular tests*, 2003.

[61] P. E. Pfeffer, "Interaction of vehicle and steering system regarding on-centre handling", PhD thesis, University of Bath, 2006.

[62] H. B. Pacejka, *Tyre and vehicle dynamics*, 2nd ed. Butterworth-Heinemann, 2006.

[63] R. S. Sharp and R. Granger, "On car steering torques at parking speeds", *Proceedings of the Institution of Mechanical Engineers, Part D: Journal of Automobile Engineering*, vol. 217, no. 2, pp. 87–96, Feb. 2003.

[64] M. Rösth, "Hydraulic power system design in road vehicles", Phd thesis, Linköping University, 2007.

[65] A. Dell'Amico, "On electrohydraulic pressure control for power steering applications: Active steering for road vehicles", PhD thesis, Linköping University, 2016.

[66] Y. Chai, T. Kimura, and K. Igarashi, "Contribution for vehicle dynamics with a steering system which controls tire angles and steering force independently", in *12th International Symposium on Advanced Vehicle Control*, 2014, pp. 504–508.

[67] A. J. Day, *Braking of road vehicles*. Butterworth-Heinemann, 2014.

[68] L. M. Henderson, "Improving emergency braking performance of heavy goods vehicles", PhD thesis, University of Cambridge, 2014.

[69] J. I. Miller, "Advanced braking systems for heavy vehicles", PhD thesis, University of Cambridge, 2010.

[70] G. Morrison and D. Cebon, "Combined emergency braking and turning of articulated heavy vehicles", *Vehicle Syst Dyn*, 2016.

[71] O. Benderius and G. Markkula, "Evidence for a fundamental property of steering", in *Proceedings of the Human Factors and Ergonomics Society Annual Meeting*, SAGE Publications, vol. 58, 2014, pp. 884–888.

[72] A. P. Georgopoulos, "On reaching", *Annual review of neuroscience*, vol. 9, no. 1, pp. 147–170, 1986.

[73] R. Carpenter and B. Reddi, *Neurophysiology: A conceptual approach*, 5th ed. CRC Press, 2012.

[74] R. Shadmehr and F. A. Mussa-Ivaldi, "Adaptive representation of dynamics during learning of a motor task", *The Journal of Neuroscience*, vol. 14, no. 5, pp. 3208–3224, 1994.

[75] N. Bhushan and R. Shadmehr, "Computational nature of human adaptive control during learning of reaching movements in force fields", *Biological cybernetics*, vol. 81, no. 1, pp. 39–60, 1999.

[76] R. Deborne, A. Barthou, D. Toffin, G. Reymond, and A. Kemeny, "Simulation study of driver stress and performance to an unexpected steering critical event", in *Proceedings of the Driving Simulation Conference*, 2008.

[77] O. Benderius, "Modelling driver steering and neuromuscular behaviour", PhD thesis, Chalmers University of Technology, 2014.

[78] G. N. Lewis, C. D. MacKinnon, R. Trumbower, and E. J. Perreault, "Co-contraction modifies the stretch reflex elicited in muscles shortened by a joint perturbation", *Experimental brain research*, vol. 207, no. 1-2, pp. 39–48, 2010.

[79] D. Shenvi and P. Balasubramanian, "A comparative study of visual and auditory reaction times in males and females", *Indian journal of physiology and pharmacology*, vol. 38, pp. 229–229, 1994.

[80] T. Hesse, A. Schieben, M. Heesen, M. Dziennus, S. Griesche, and F. Köster, "Interaction design for automation initiated steering manoeuvres for collision avoidance", *6. Tagung Fahrerassistenzsysteme*, 2013.

[81] M. Keller, C. Hass, A. Seewald, and T. Bertram, "Driving simulator study on an emergency steering assist", in *2014 IEEE International Conference on Systems, Man, and Cybernetics (SMC)*, IEEE, 2014, pp. 3008–3013.

[82] J. P. Switkes, J. C. Gerdes, G. F. Schmidt, and M. Kiss, "Driver response to steering torque disturbances: A user study on assisted lanekeeping", *IFAC Proceedings Volumes*, vol. 40, no. 10, pp. 243–250, 2007.

[83] D. Katzourakis, M. Alirezaei, J. C. de Winter, M. Corno, R. Happee, A. Ghaffari, and R. Kazemi, "Shared control for road departure prevention", in *2011 IEEE International Conference on Systems, Man, and Cybernetics*, IEEE, 2011, pp. 1037–1043.

[84] K. Iwano, P. Raksincharoensak, and M. Nagai, "A study on shared control between the driver and an active steering control system in emergency obstacle avoidance situations", *IFAC Proceedings Volumes*, vol. 47, no. 3, pp. 6338–6343, 2014.

[85] T. Brandt, T. Sattel, and M. BOhm, "Combining haptic human-machine interaction with predictive path planning for lane-keeping and collision avoidance systems", in *2007 IEEE Intelligent Vehicles Symposium*, IEEE, 2007, pp. 582–587.

[86] L. M. Crespo and D. J. Reinkensmeyer, "Haptic guidance can enhance motor learning of a steering task", *Journal of motor behavior*, vol. 40, no. 6, pp. 545–557, 2008.

[87] M. Mulder, D. A. Abbink, and E. R. Boer, "The effect of haptic guidance on curve negotiation behavior of young, experienced drivers", in *2008 IEEE International Conference on Systems, Man and Cybernetics*, IEEE, 2008, pp. 804–809.

[88] T. Melman, J. de Winter, and D. Abbink, "Does haptic steering guidance instigate speeding? a driving simulator study into causes and remedies", *Accident Analysis & Prevention*, vol. 98, pp. 372–387, 2017.

[89] E. Johansson, E. Karlsson, C. Larsson, and L. Eriksson, "Implementation and evaluation of lane departure warning and assistance systems", *Advances in Human Aspects of Road and Rail Transportation, Edited by Neville A. Stanton*, pp. 37–46, 2012.

[90] M. Rothhämel, J. IJkema, and L. Drugge, "Influencing driver chosen cornering speed by means of modified steering feel", *Vehicle System Dynamics*, vol. 52, no. 4, pp. 522–538, 2014.

[91] M. Montiglio, S. Martini, and V. Murdocco, "Development of a lane keeping support system for heavy-trucks", in *13th ITS World Congress*, 2006.

[92] V. Ciarla, V. Cahouet, C. Canudas de Wit, and F. Quaine, "Genesis of booster curves in electric power assistance steering systems", in *2012 15th International IEEE Conference on Intelligent Transportation Systems*, 2012, pp. 1345–1350.

[93] N. Kim and D. J. Cole, "A model of driver steering control incorporating the driver's sensing of steering torque", *Vehicle System Dynamics*, vol. 49, no. 10, pp. 1575–1596, Oct. 2011.

[94] S. Anand, J. Terken, and J. Hogema, "Individual differences in preferred steering effort for steer-by-wire systems", in *The 3rd International Conference on Automotive User Interfaces and Interactive Vehicular Applications*, 2011, pp. 55–62.

[95] T. Barthenheier and H. Winner, "Das persönliche Lenkgefühl", in *Fahrwerk.tech*, 2003.

[96] A. Newberry, M. Griffin, and M. Dowson, "Driver perception of steering feel", *Proceedings of the Institution of Mechanical Engineers, Part D: Journal of Automobile Engineering*, vol. 221, no. 4, pp. 405–415, Jan. 2007.

[97] H. Z. Tan, M. A. Srinivasan, B. Eberman, and B. Cheng, "Human factors for the design of force-reflecting haptic interfaces", *Dynamic Systems and Control*, vol. 55, no. 1, pp. 353–359, 1994.

[98] A. Neukum, E. Ufer, J. Paulig, and H. Kruger, "Controllability of superposition steering system failures", *Steering tech*, 2008.

[99] P. Sweatman and P. N. Joubert, "Detection of changes in automobile steering sensitivity", *The Journal of the Human Factors and Ergonomics Society*, vol. 16, no. 1, pp. 29–36, 1974.

[100] D. A. Abbink, M. Mulder, and M. M. van Paassen, "Measurements of muscle use during steering wheel manipulation", in *2011 IEEE International Conference on Systems, Man, and Cybernetics*, Anchorage: IEEE, Oct. 2011, pp. 1652–1657.

[101] D. Kim, J. Lee, and K. Yi, "Development of a combined steering torque overlay and differential braking control for side crash prevention", in *2012 IEEE 75th Vehicular Technology Conference (VTC Spring)*, IEEE, 2012, pp. 1–5.

[102] Volvo Cars, *Electronic stability control (esc) - general*, Online `http://support.volvocars.com/uk/cars/Pages/owners-manual.aspx?mc=Y555&my=2015&sw=14w20&article=`, Visited 013017.

[103] H. E. Pettersson, J. Aurell, and S. Nordmark, "Truck driver behaviour in critical situations and the impact of surprise", in *DSC 2006 Europe*, 2006.

[104] G. Markkula, O. Benderius, and M. Wahde, "Comparing and validating models of driver steering behaviour in collision avoidance and vehicle stabilisation", *Vehicle System Dynamics*, vol. 52, no. 12, pp. 1658–1680, 2014.

[105] D. J. Cole, "A path-following driver–vehicle model with neuromuscular dynamics, including measured and simulated responses to a step in steering angle overlay", *Vehicle System Dynamics*, vol. 50, no. 4, pp. 573–596, 2012.

[106] D. Cole, A. Pick, and A. Odhams, "Predictive and linear quadratic methods for potential application to modelling driver steering control", *Vehicle System Dynamics*, vol. 44, no. 3, pp. 259–284, 2006.

[107] S. Patwardhan, M. Tomizuka, W.-B. Zhang, and P. Devlin, "Theory and experiments of tire blow-out effects and hazard reduction control for automated vehicle lateral control system", in *American Control Conference, 1994*, IEEE, vol. 2, 1994, pp. 1207–1209.

[108] K. V. Chakravarthy, *Development of a steer axle tire blowout model for tractor semitrailers in trucksim*, The Ohio State University, Thesis for degree of master of science, 2008.

[109] A. Magnusson, L. Laine, J. Lindberg, F. Elgh, and A. Eriksson, "A functionality reference architecture for commercial vehicles", in *SAE 2017 Commercial Vehicle Engineering Congress*, to be published, 2017.

[110] D. T. McRuer, "Pilot-induced oscillations and human dynamic behavior", NASA, Tech. Rep., 1995, NASA Contractor Report 4683.

[111] K. McKay, "Flight vehicle integration panel workshop on pilot-induced oscillations", AGARD, Tech. Rep., 1995, Advisory report No 335.

[112] A. Brändström, *The stockholm jas fighter crash of 1993*, L. Arback, Ed. Swedish National Defence College, 2003.

[113] D. Katzourakis, "Driver steering support interfaces near the vehicles handling limits", PhD thesis, TU Delft, 2012.

[114] D. G. Ebert and R. A. Kaatz, "Objective characterization of vehicle brake feel", SAE Technical Paper, Tech. Rep., 1994.

[115] K. Bill, M. Semsch, and B. Breuer, "A new approach to investigate the vehicle interface driver/brake pedal under real road conditions in view of oncoming brake-by-wire-systems", SAE Technical Paper, Tech. Rep., 1999.

[116] W. Manning and D. Crolla, "A review of yaw rate and sideslip controllers for passenger vehicles", *Transactions of the Institute of Measurement and Control*, vol. 29, no. 2, pp. 117–135, 2007.

[117] G. Markkula, J. Eklöv, L. Laine, E. Wikenhed, and N. Fröjd, "Improving yaw stability control in severe instabilities by means of a validated model of driver steering", in *2015 IEEE Intelligent Vehicles Symposium*, IEEE, 2015, pp. 18–23.

[118] B. Schofield, T. Hägglund, and A. Rantzer, "Vehicle dynamics control and controller allocation for rollover prevention", in *2006 IEEE International Conference on Control Applications*, IEEE, 2006, pp. 149–154.

[119] T. Johansen and T. Fossen, "Control allocation a survey", *Automatica*, vol. 49, no. 5, pp. 1087–1103, 2013.

[120] L. Laine, "Reconfigurable motion control systems for over-actuated road vehicles", PhD thesis, Chalmers University of Technology, 2007.

[121] O. Härkegård, "Backstepping and control allocation with application to flight control", PhD thesis, Linköping University, 2003.

[122] A. Domahidi and J. Jerez, *FORCES Professional*, embotech GmbH (`http://embotech.com/FORCES-Pro`), Jul. 2014.

[123] dSpace, *MicroAutoBox II product information*, E, Aug. 2016.

[124] NXP Semiconductors, *SPC5746R microcontroller data sheet*, Document Number MPC5746R, Rev. 5, 10/2016, 2016.

[125] ISO, *International Standard 26262 Road vehicles – Functional safety –Part 1 to 10*, 2011.

[126] B. Källstrand, *Control allocation for vehicle motion control*, Chalmers University of Technology, Thesis for degree of master of science, 2016.

[127] J. Jansson, J. Sandin, B. Augusto, M. Fischer, B. Blissing, and L. Källgren, "Design and performance of the VTI Sim IV", in *Driving Simulation Conference*, 2014.

[128] A. Odhams, R. Roebuck, Y. Lee, S. Hunt, and D. Cebon, "Factors influencing the energy consumption of road freight transport", *Proceedings of the Institution of Mechanical Engineers, Part C: Journal of Mechanical Engineering Science*, vol. 224, no. 9, pp. 1995–2010, 2010.

[129] T. Asp and A. Berndtsson, "Hct (high capacity transports) on road: Swedish steps toward an efficient transport system", in *The 13th International Symposium on Heavy Vehicle Transport Technology (HVTT13)*, 2014.

[130] P. Nordengen, H. Prem, and L. Mai, "Initiative to introduce a performance-based standards (pbs) approach for heavy vehicle design and operations in south africa", 2008.

Nomenclature

This list is only valid for the preceding chapters of the thesis, not for the appended papers. For sign conventions see ISO 8855 [54]. The list is sorted alphabetically, with Greek letters last.

a	Longitudinal distance from centre of gravity of truck unit to the front axle, [m]
A_a	Actuation area in a brake cylinder, [m^2]
$a_{X,req}$	Reference longitudinal acceleration calculated from driver inputs, [m/s^2]
a_Y	Lateral acceleration, [m/s^2]
B	Effectiveness matrix in allocation problem
b	Track (lateral distance between left and right tyre contact patch), [m]
$C_{\alpha F}$	Front axle cornering stiffness, [N/rad]
$C_{\alpha R}$	Sum of rear axle cornering stiffnesses, [N/rad]
$\frac{\partial a_Y}{\partial \delta_H}$	Lateral acceleration gain, [m/s^2 /rad]
$\frac{\partial F_{YT}}{\partial \alpha}$	Cornering stiffness of the front axle, [N/rad]
$\frac{\partial \omega_Z}{\partial \delta_H}$	Yaw rate gain, [rad/(s rad)]
e	Distance from centre of gravity of the truck unit to the coupling point (positive backwards), [m]
e_ω	Yaw rate control error, [rad/s]
$F_{trailer,c}$	Upper and lower limitations of the planar force that is acting in the coupling between the truck and the first trailer, [N, N]
$F_{trailer,req}$	Planar force that is acting in the coupling between the truck and the first trailer, [N]
$F_{X,max}$	Upper constrain of the induced vehicle longitudinal force, [N]
$F_{X,min}$	Lower constrain of the induced vehicle longitudinal force, [N]
$F_{X,req}$	Requested total longitudinal force that should act on the towing unit, [N]
F_{XT}	Force acting on a tyre in the contact patch with the ground in the direction of X_T, [N]
F_{XTi}	Longitudinal tyre force of wheel i, [N]
F_{YT}	Force acting on a tyre in the contact patch with the ground in the direction of Y_T, [N]

F_{YTF}	Sum of lateral tyre forces acting on the front axle wheels, [N]
F_{YTF0}	Lateral force acting on front axle in absence of actuator involvement, [N]
F_{ZT}	Force acting on a tyre in the contact patch with the ground in the direction of Z_T, [N]
g	Constant of gravity, [m/s^2]
H	Matrix in quadratic friction constrain of front axle
i	Index used to denote in order, front left, front right, first rear left, first rear right,second rear left,..., [-]
i_s	Steering ratio (ratio between steering wheel angle and the average of the two front wheel steer angles), [-]
I_W	Inertia of the wheel and all parts that are attached to it, [kgm^2]
K_{as}	Linear coefficient between steering wheel angle and vehicle yaw torque, [N m/rad]
K_I	Integral control gain, [(rad/s)/(N m s)]
K_P	Proportional control gain, [(rad/s)/(N m)]
K_u	Linear understeer gradient, [rad]
L	Geometrical wheelbase of multi-axle vehicle (calculated as the distance from the front axle to point zero, defined as the point where the moments generated by vertical loads of the rear axles add up to zero), [m]
l	Wheelbase of a two axle vehicle (longitudinal distance between the front and rear axle wheel contact centre), [m]
l_{eq}	Equivalent wheelbase of multi-axle vehicle, [m]
m	Total mass of the vehicle combination, [kg]
M_B	Brake torque acting on a wheel, [N m]
M_h	Steering wheel torque, [N m]
M_V	Resulting moment acting on the upper steering arm from vertical tyre forces on front axle, [N m]
M_{XT}	Moment acting on a tyre in the contact patch with the ground around the X_T axis, [N m]
M_{YT}	Moment acting on a tyre in the contact patch with the ground around the Y_T axis, [N m]
M_Z	Vehicle yaw torque, [N m]
$M_{Z,max}$	Upper constrain of the induced vehicle yaw torque, [N m]
$M_{Z,min}$	Lower constrain of the induced vehicle yaw torque, [N m]
$M_{Z,req}$	Requested total yaw torque that should act on the towing unit, [N m]
M_{ZT}	Moment acting on a tyre in the contact patch with the ground around the Z_T axis (aligning moment), [N m]
N	Number of wheels on truck unit, [-]
N_r	Number of rear axles, [-]
P_B	Brake pressure in brake cylinder, [bar]

P_T	Brake pressure threshold value, [bar]
r	Residual after allocation, [N, N m]$^\intercal$
r_e	Mean radius of the disc/pad rubbing path, [m]
r_k	Steering-axis offset at ground also known as kingpin offset at ground (lateral component of the distance between road wheel contact centre and the steering axis), [m]
r_{stat}	Wheel radius measured from ground to wheel centre, [m]
s	Travelled distance, [m]
T	Tandem factor, [m^2]
t	Time, [s]
$T_{b,c,i}$	Upper and lower limitations of individual wheel brake torque request on wheel i located on the truck unit, [N m, N m]
$T_{b,req,i}$	Individual brake torque request on wheel i located on the truck unit, [N m]
t_L	Pneumatic trail length of left front wheel (positive backwards from wheel centre), [m]
t_R	Pneumatic trail length of right front wheel (positive backwards from wheel centre), [m]
u	Actuator vector before transformation to actuator format, [N, N, ...,N, N]$^\intercal$
u_d	Set point vector in objective allocation function of allocation vector, [N, N, ..., N, N]$^\intercal$
u^*	Optimal actuator vector before transformation to actuator format, [N, N, ..., N, N]$^\intercal$
u_t	Optimal actuator vector after transformation to actuator format, [rad, N m, ..., N m, N]$^\intercal$
v	Virtual control vector in allocation problem, [N, N m]$^\intercal$
v_{max}	Upper limit vector on coupled motion force and torque, [N, N m]$^\intercal$
v_{min}	Lower limit vector on coupled motion force and torque, [N, N m]$^\intercal$
$\tilde{v}$	Alternative virtual control vector in allocation problem, [N, N m]$^\intercal$
v_X	Longitudinal velocity , [m/s]
W_u	Diagonal weighting matrix, to penalise use of certain actuator
W_v	Diagonal weighting matrix used to emphasis what element in v that is of highest importance in allocation problem
X	Axis in intermediate axis system directed horizontally forward on the vehicle
x_E	Longitudinal position of centre of gravity of the truck unit in an earth fixed coordinate system, [m]
X_T	Axis in tyre axis system fixed, pointing horizontally forwards
X_V	Axis in vehicle axis system fixed on the vehicle sprung mass, pointing forwards

Y	Axis in intermediate axis system directed horizontally left on the vehicle when facing forwards
y_E	Lateral position of centre of gravity of the truck unit in an earth fixed coordinate system, [m]
Y_T	Axis in tyre axis system fixed, pointing horizontally left
Y_V	Axis in vehicle axis system fixed on the vehicle sprung mass, pointing left when facing forwards
Z	Axis in intermediate axis system directed vertically upwards
Z_T	Axis in tyre axis system fixed, aligned with Z
Z_V	Axis in vehicle axis system fixed on the vehicle sprung mass, pointing upwards
β	Body side slip at centre of gravity, [-]
γ	Scalar weighting parameter in allocation problem
Γ	Anti-windup clamping function, [-]
δ	Wheel steer angle (formed by X direction of the vehicle and the horizontal direction of the respective wheel), [rad]
δ_{as}	Steering wheel angle limit parameter for yaw torque disturbance, [rad]
$\Delta a_{X,req}$	Requested change in longitudinal acceleration by a function on a higher layer, [m/s^2]
$\delta_{H,req}$	Requested angle to overlaid steering wheel torque controller, [rad]
δ_h	Steering wheel angle, [rad]
$\delta_{H,c}$	Upper and lower limitations of requested angle to overlaid steering wheel torque controller, [rad, rad]
$\dot{\delta}_{H,max}$	Maximum allowed absolute rate of change of EPS request, [rad/s]
Δ_i	Longitudinal distance from axle i to point zero, [m]
$\Delta\Psi_n$	Yaw articulation angle between the truck and the first trailer unit, [rad]
Δy_{max}	Absolute distance from the most distant point of the truck to the intended course, [m]
$\Delta\omega_{Z,req}$	Requested change in vehicle yaw rate by a function on a higher layer, [rad/s]
η	Gain factor of a brake calliper, [-]
κ	Instantaneous curvature, [1/m]
κ_R	Instantaneous road curvature, [1/m]
ξ	Integration time variable, [s]
μ_B	Coefficient of friction between brake disc and pad, [-]
σ	Kingpin inclination angle (the angle between the Z_V-axis and the steering axis, projected onto the $Y_V Z_V$-plane), [rad]
τ	Castor (or caster) angle (the angle between the Z_V-axis and the steering axis, being projected onto the $X_V Z_V$-plane), [rad]
ω_W	Angular velocity of the wheel around the wheel-spin axis, [rad/s]
ω_Z	Yaw rate of towing unit, [rad/s]
$\omega_{Z,req}$	Reference yaw rate of leading unit calculated from driver inputs, [rad/s]

Acronyms

ABS	anti-lock braking system
AEBS	advanced emergency braking system
EBS	electronic braking system
EPS	electronic power steering
ESC	electronic stability control
EU	European Union
EU27	European Union member states: Austria, Belgium, Bulgaria, Cyprus, Czech Republic, Denmark, Estonia, Finland, France, Germany, Greece, Hungary, Ireland, Italy, Latvia, Lithuania, Luxembourg, Malta, the Netherlands, Poland, Portugal, Romania, Slovak Republic, Slovenia, Spain, Sweden and the United Kingdom
FCW	forward collision warning system
HPS	hydraulic power steering
ISO	International Organization for Standardization
LDW	lane departure warning system
LKA	lane keeping aid
OEM	original equipment manufacturer
US	United States of America